## Architect's PERSPECTIVE

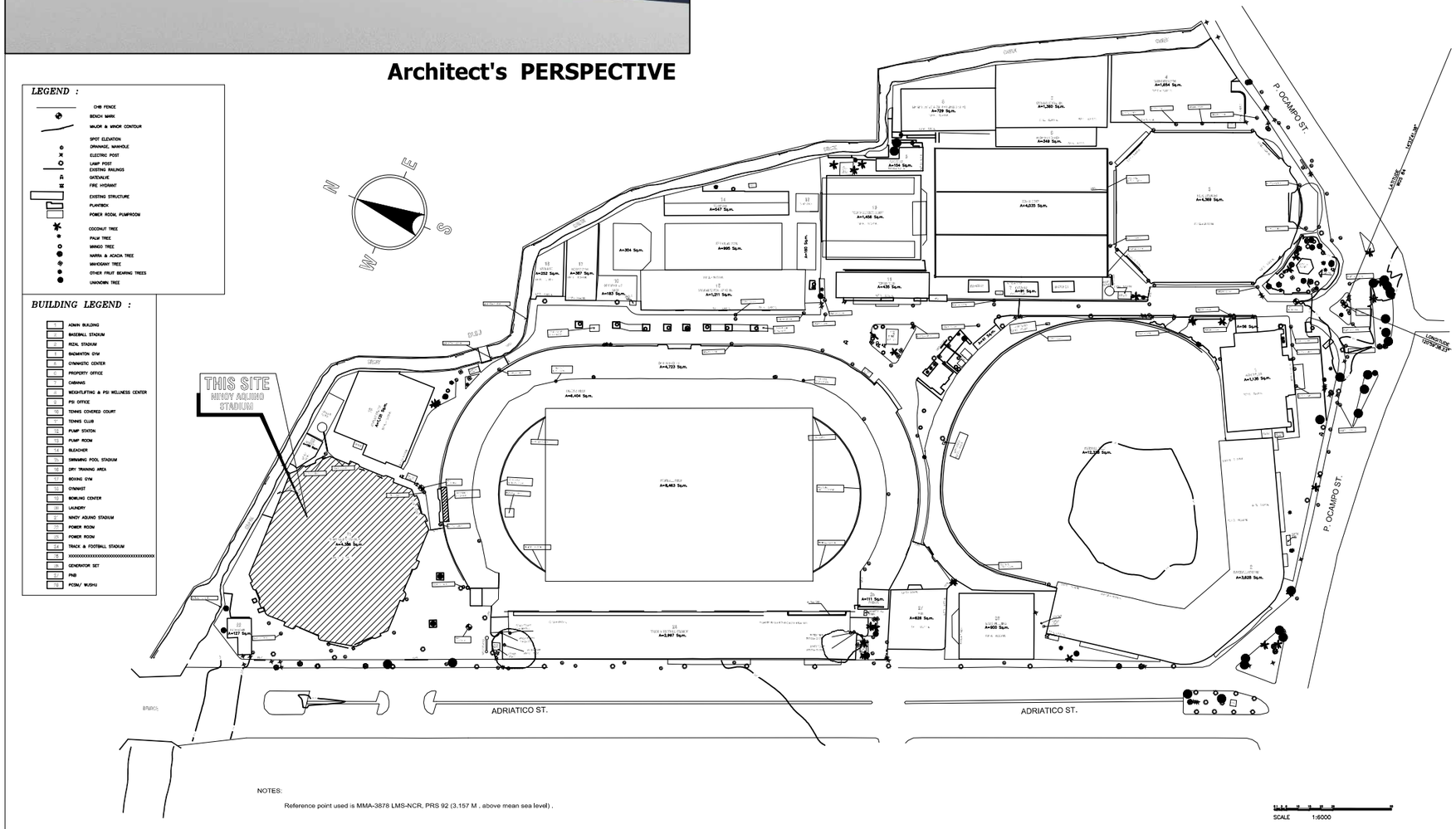


NOTES:

Reference point used is MMA-3878 LMS-NCR, PRS 92 (3.157 M , above mean sea level) .

SCALE 1:6000

DRAWING INDEX

REPUBLIC OF THE PHILIPPINES
DEPARTMENT OF PUBLIC WORKS & HIGHWAYS

**OFFICE OF THE BUILDING OFFICIAL**

DISTRICT / CITY / MUNICIPALITY

**LAND USE AND ZONING**

**LINE AND GRADE**

**ARCHITECTURAL**

**STRUCTURAL**

**SANITARY**

**ELECTRICAL**

**MECHANICAL**

| OWNER : | PROJECT : | DESIGN BY: | SUBMITTED BY: | RECOMMENDING APPROVAL: | APPROVED BY : | SHEET CONTENT : | SHEET NO : |
|---|---|---|---|---|---|---|---|
| **PHILIPPINE SPORTS COMMISSION**<br>RMSC, PABLO OCAMPO SR. ST, MALATE, MANILA | **NINOY AQUINO STADIUM REHABILITATION PROJECT** | DRAWN BY: | ENGR. PEDRO I. PINEDA JR.<br>HEAD - ENGINEERING UNIT | DIR. MERLITA R. IBAY<br>DEPUTY EXECUTIVE DIRECTOR | HON. WILLIAM I. RAMIREZ<br>CHAIRMAN | ARCHITECT'S PERSPECTIVE<br>SITE DEVELOPMENT PLAN | A<br>1 / 12 |
| | | CHECK BY: | | | | | |
| | RMSC, PABLO OCAMPO SR. ST, MALATE, MANILA | DATE: | | | | | |

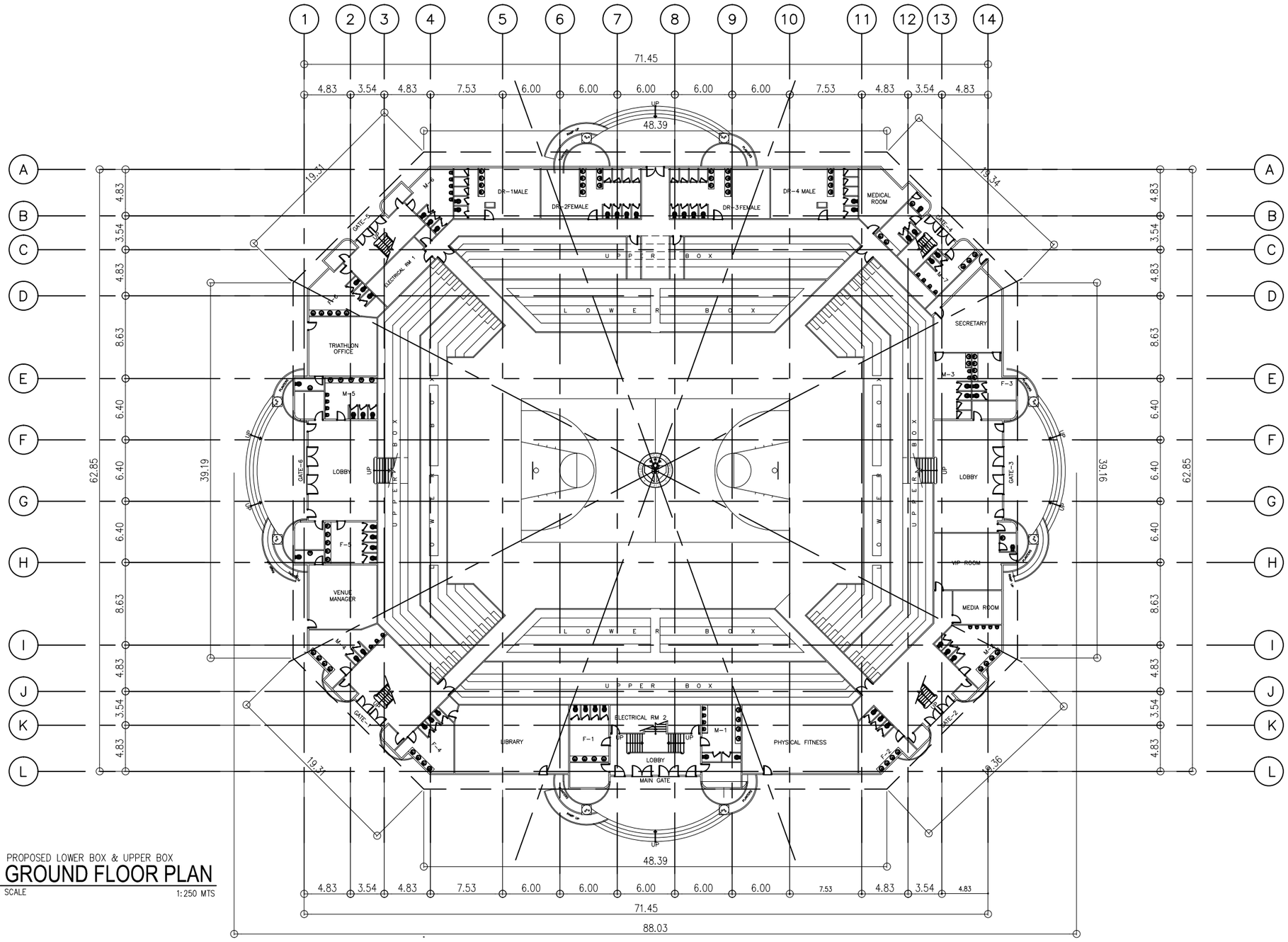


PROPOSED LOWER BOX & UPPER BOX

# GROUND FLOOR PLAN

1 | A2 | A12

SCALE 1:250 MTS

| OWNER : | PROJECT : | DESIGN BY: | SUBMITTED BY: | RECOMMENDING APPROVAL: | APPROVED BY : | SHEET CONTENT : | SHEET NO : |
|---|---|---|---|---|---|---|---|
| **PHILIPPINE SPORTS COMMISSION**<br>RMSC, PABLO OCAMPO SR. ST, MALATE, MANILA | **NINOY AQUINO STADIUM REHABILITATION PROJECT** | DRAWN BY: | ENGR. PEDRO I. PINEDA JR.<br>HEAD - ENGINEERING UNIT | DIR. MERLITA R. IBAY<br>DEPUTY EXECUTIVE DIRECTOR | HON. WILLIAM I. RAMIREZ<br>CHAIRMAN | GROUND FLOOR PLAN | A<br>2 \| 12 |
| | | CHECK BY: | | | | | |
| | RMSC, PABLO OCAMPO SR. ST, MALATE, MANILA | DATE: | | | | | |

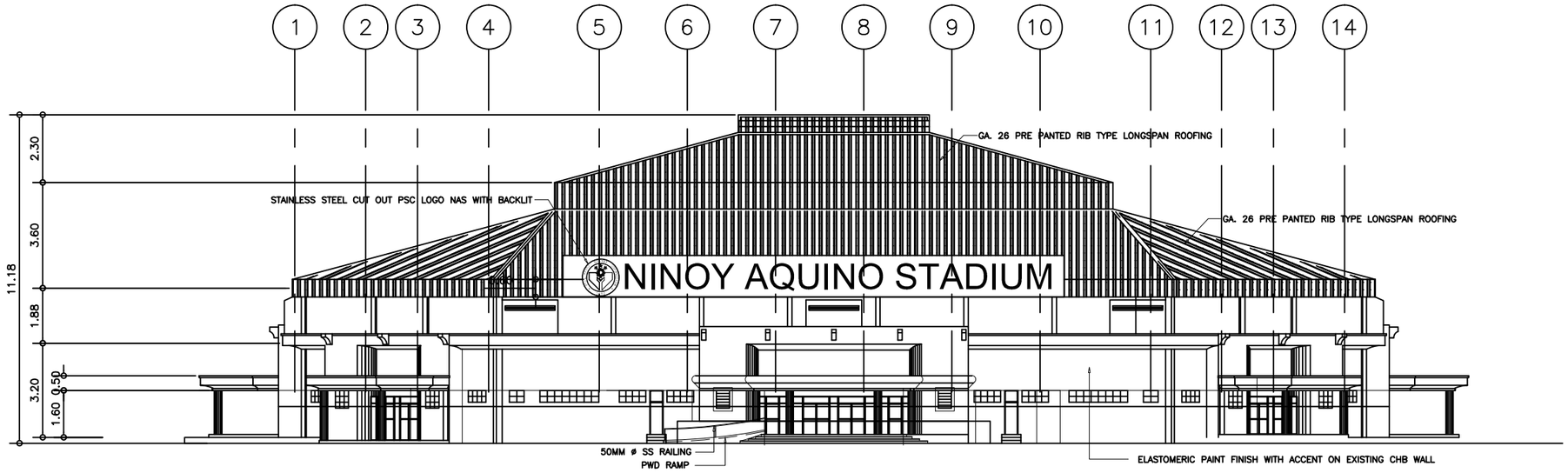


1 A4 A12 FRONT ELEVATION
SCALE 1:200 MTS

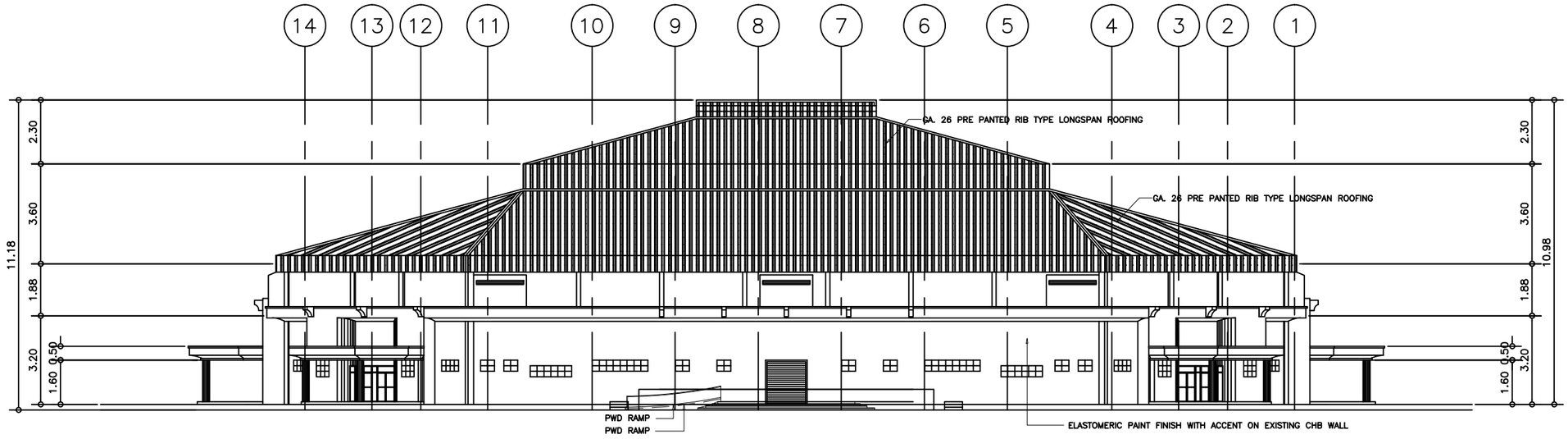


2 A4 A12 REAR ELEVATION
SCALE 1:200 MTS

| OWNER : | PROJECT : | DESIGN BY: | SUBMITTED BY: | RECOMMENDING APPROVAL: | APPROVED BY : | SHEET CONTENT : | SHEET NO : |
|---|---|---|---|---|---|---|---|
| **PHILIPPINE SPORTS COMMISSION**<br>RMSC, PABLO OCAMPO SR. ST, MALATE, MANILA | **NINOY AQUINO STADIUM REHABILITATION PROJECT** | DRAWN BY: | ENGR. PEDRO I. PINEDA JR.<br>HEAD - ENGINEERING UNIT | DIR. MERLITA R. IBAY<br>DEPUTY EXECUTIVE DIRECTOR | HON. WILLIAM I. RAMIREZ<br>CHAIRMAN | FRONT ELEVATION<br>REAR ELEVATION | A<br>4 12 |
| | | CHECK BY: | | | | | |
| | RMSC, PABLO OCAMPO SR. ST, MALATE, MANILA | DATE: | | | | | |

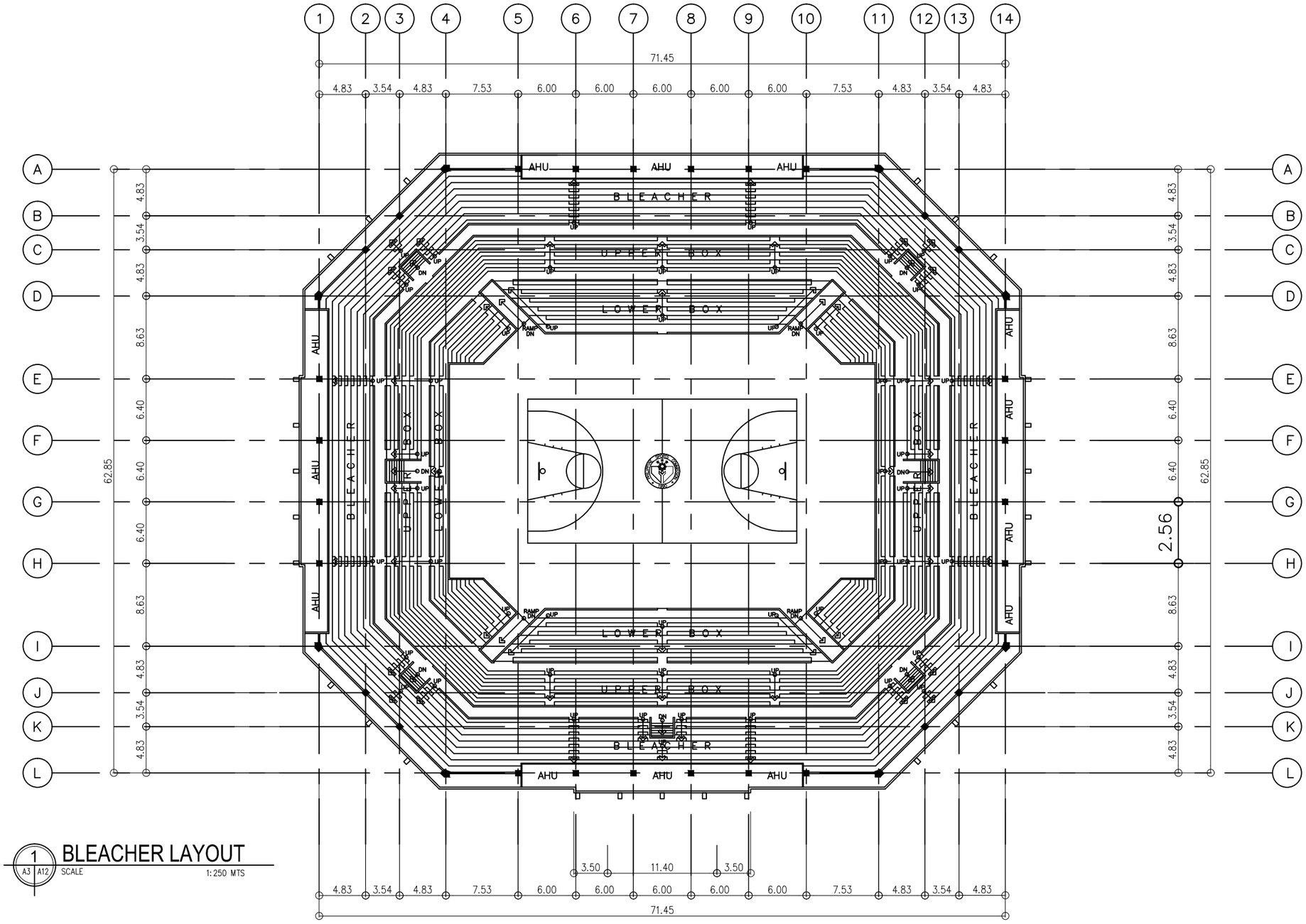


1 BLEACHER LAYOUT
A3 A12 SCALE 1:250 MTS

| OWNER : | PROJECT : | DESIGN BY: | SUBMITTED BY: | RECOMMENDING APPROVAL: | APPROVED BY : | SHEET CONTENT : | SHEET NO : |
|---|---|---|---|---|---|---|---|
| **PHILIPPINE SPORTS COMMISSION**<br>RMSC, PABLO OCAMPO SR. ST, MALATE, MANILA | **NINOY AQUINO STADIUM REHABILITATION PROJECT**<br>RMSC, PABLO OCAMPO SR. ST, MALATE, MANILA | DRAWN BY:<br>CHECK BY:<br>DATE: | ENGR. PEDRO I. PINEDA JR.<br>HEAD - ENGINEERING UNIT | DIR. MERLITA R. IBAY<br>DEPUTY EXECUTIVE DIRECTOR | HON. WILLIAM I. RAMIREZ<br>CHAIRMAN | BLEACHER LAYOUT | A<br>3 12 |

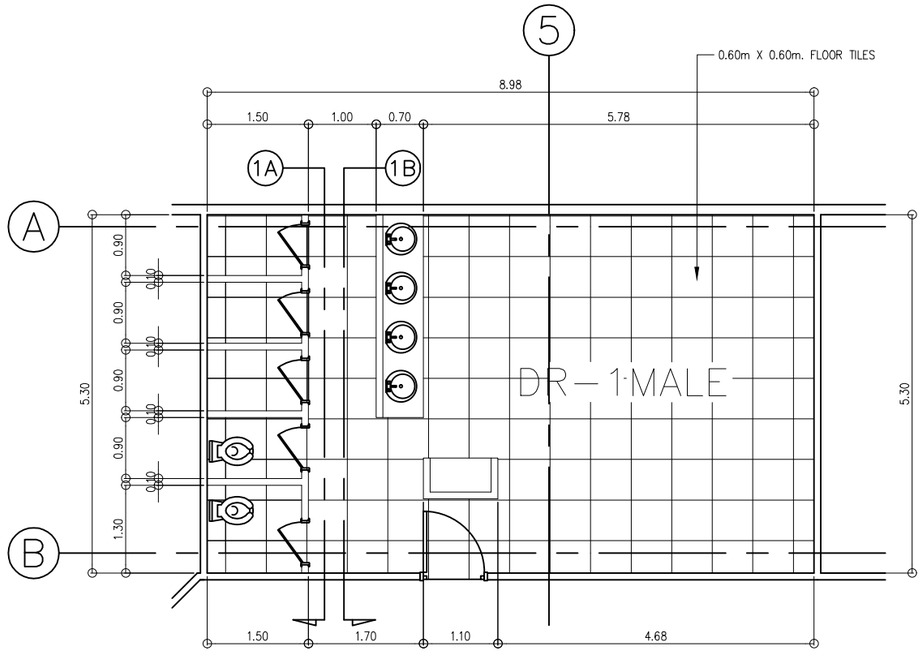


1 A5 A12 DRESSING ROOM - 1MALE
SCALE 1:50 MTS

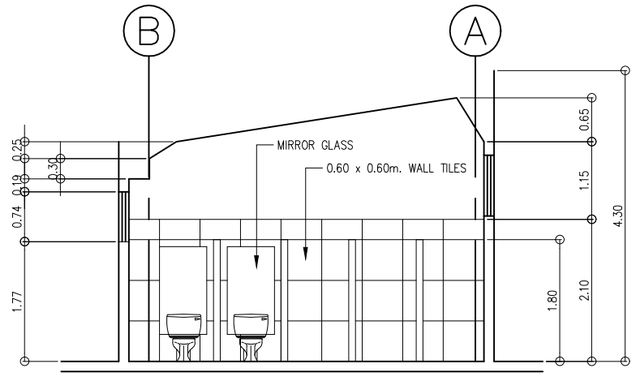


1A A5 A12 DR - 1MALE SECTION THRU-1A
SCALE 1:50 MTS

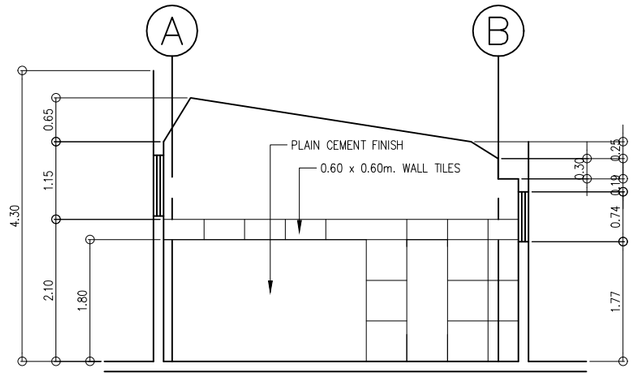


1B A5 A12 DR - 1MALE SECTION THRU-1B
SCALE 1:50 MTS

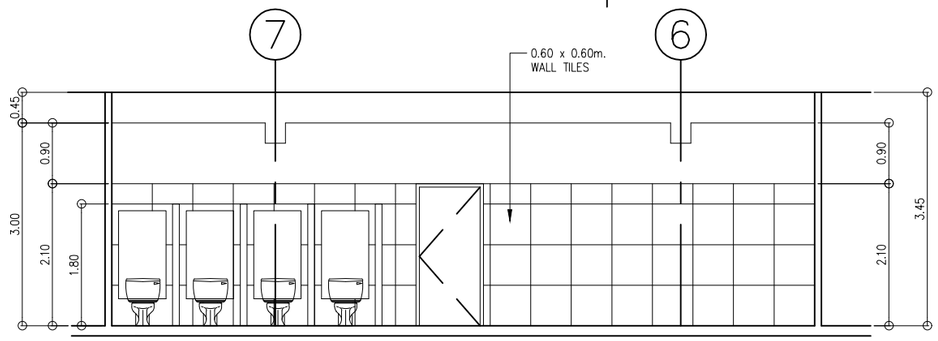


2A A5 A12 DR - 2FEMALE SECTION THRU-2A
SCALE 1:50 MTS

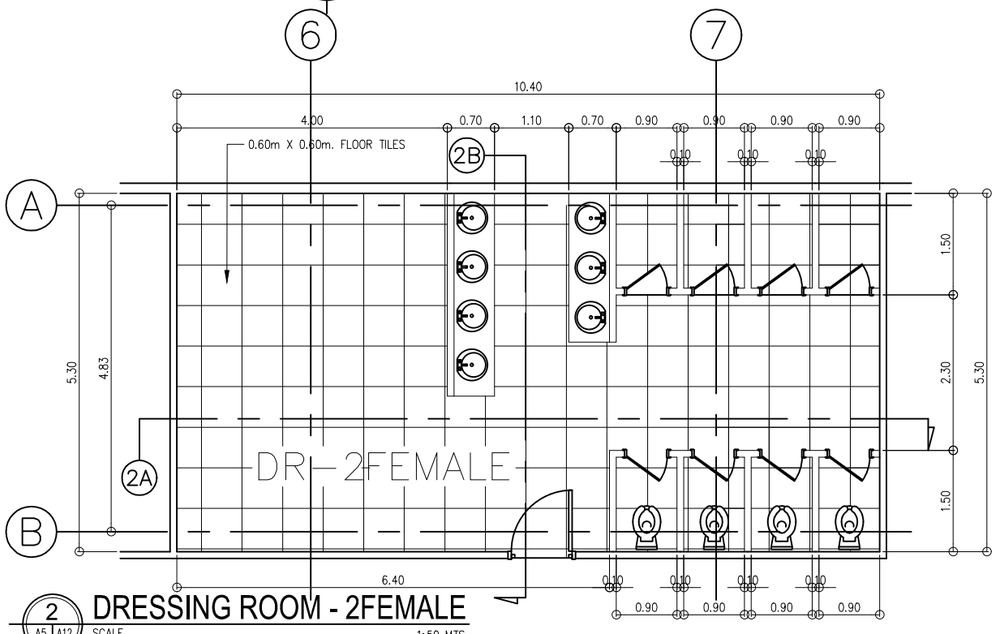


2 A5 A12 DRESSING ROOM - 2FEMALE
SCALE 1:50 MTS

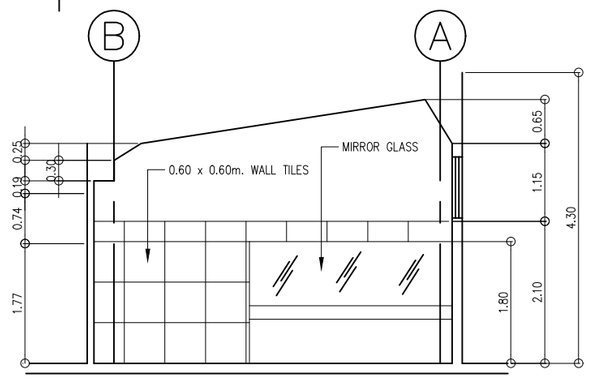


2B A5 A12 DR - 2FEMALE SECTION THRU-2B
SCALE 1:50 MTS

| OWNER : | PROJECT : | DESIGN BY: | SUBMITTED BY: | RECOMMENDING APPROVAL: | APPROVED BY : | SHEET CONTENT : | SHEET NO : |
|---|---|---|---|---|---|---|---|
| **PHILIPPINE SPORTS COMMISSION**<br>RMSC, PABLO OCAMPO SR. ST, MALATE, MANILA | **NINOY AQUINO STADIUM REHABILITATION PROJECT** | DRAWN BY: | ENGR. PEDRO I. PINEDA JR.<br>HEAD - ENGINEERING UNIT | DIR. MERLITA R. IBAY<br>DEPUTY EXECUTIVE DIRECTOR | HON. WILLIAM I. RAMIREZ<br>CHAIRMAN | 1MALE DRESSING ROOM FLOOR PLAN<br>2FEMALE DRESSING ROOM FLOOR PLAN<br>1MALE DRESSING ROOM ELEV./SEC.<br>2FEMALE DRESSING ROOM ELEV./SEC. | A<br>5 12 |
| | | CHECK BY: | | | | | |
| | RMSC, PABLO OCAMPO SR. ST, MALATE, MANILA | DATE: | | | | | |

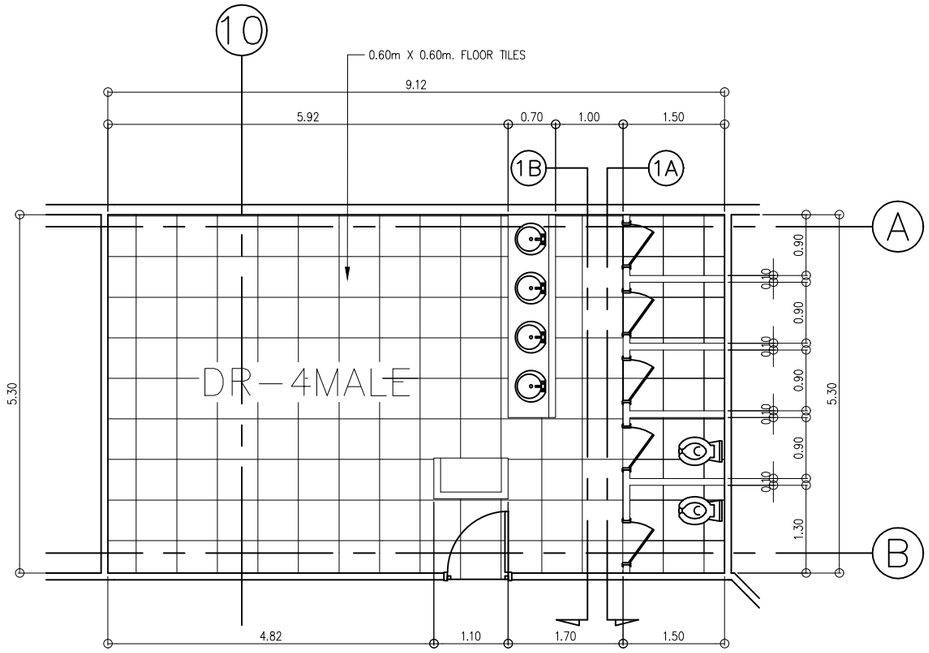


1 A6 A12 DRESSING ROOM - 4MALE
SCALE 1:50 MTS

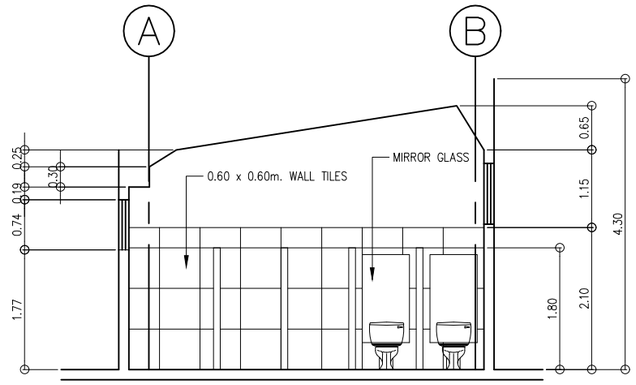


1A A6 A12 DR - 4MALE SECTION THRU-1A
SCALE 1:50 MTS

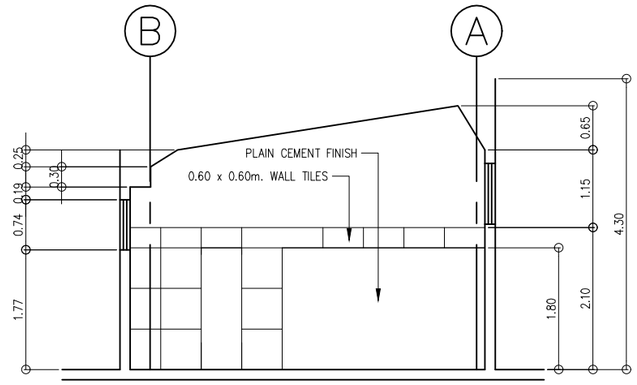


1B A6 A12 DR - 4MALE SECTION THRU-1B
SCALE 1:50 MTS

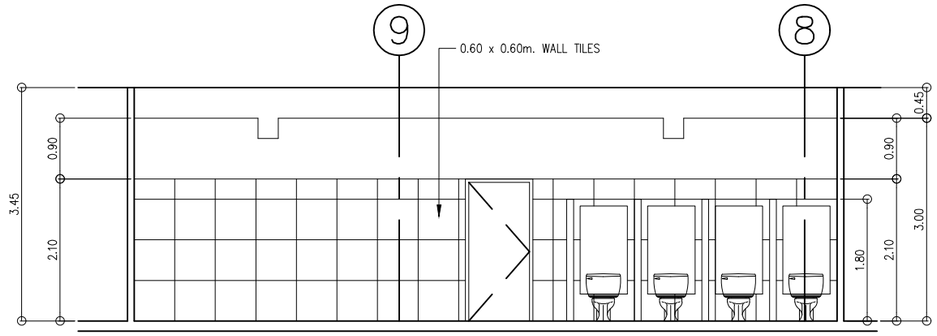


2A A6 A12 DR - 3FEMALE SECTION THRU-2A
SCALE 1:50 MTS

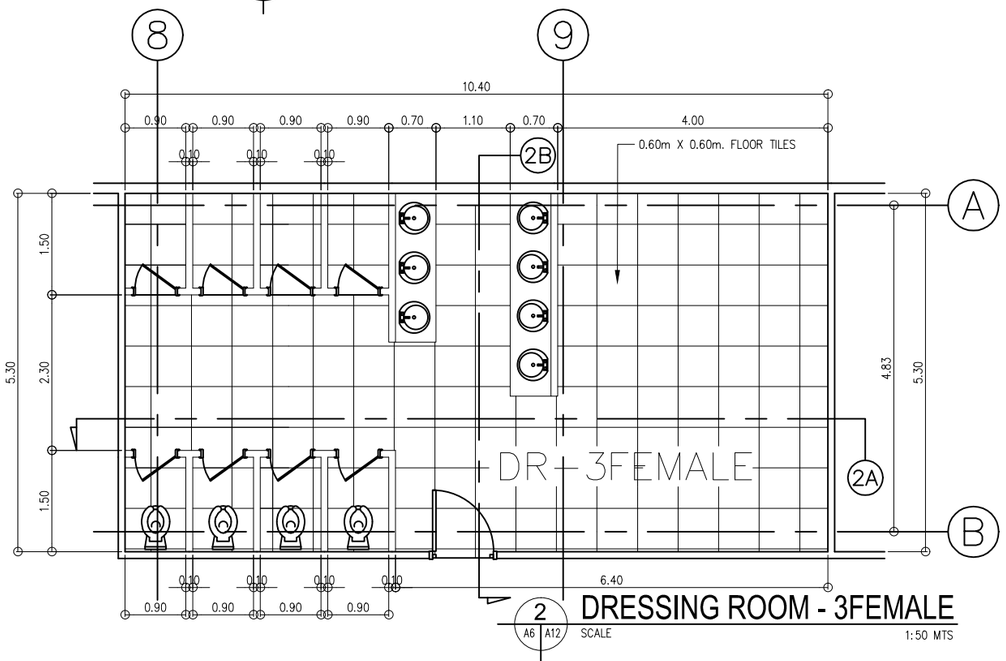


2 A6 A12 DRESSING ROOM - 3FEMALE
SCALE 1:50 MTS

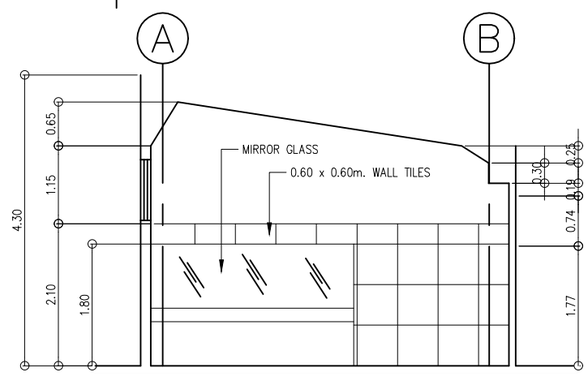


2B A6 A12 DR - 3FEMALE SECTION THRU-2B
SCALE 1:50 MTS

| OWNER : | PROJECT : | DESIGN BY: | SUBMITTED BY: | RECOMMENDING APPROVAL: | APPROVED BY : | SHEET CONTENT : | SHEET NO : |
|---|---|---|---|---|---|---|---|
| **PHILIPPINE SPORTS COMMISSION**<br>RMSC, PABLO OCAMPO SR. ST, MALATE, MANILA | **NINOY AQUINO STADIUM REHABILITATION PROJECT**<br>RMSC, PABLO OCAMPO SR. ST, MALATE, MANILA | DRAWN BY:<br>CHECK BY:<br>DATE: | ENGR. PEDRO I. PINEDA JR.<br>HEAD - ENGINEERING UNIT | DIR. MERLITA R. IBAY<br>DEPUTY EXECUTIVE DIRECTOR | HON. WILLIAM I. RAMIREZ<br>CHAIRMAN | 4MALE DRESSING ROOM FLOOR PLAN<br>3FEMALE DRESSING ROOM FLOOR PLAN<br>4MALE DRESSING ROOM ELEV./SEC.<br>3FEMALE DRESSING ROOM ELEV./SEC. | A<br>6 12 |

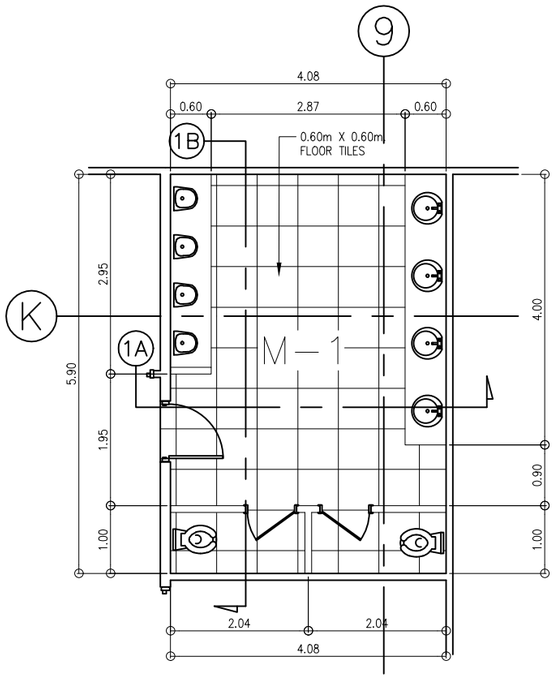


1 A7 A12 FLOOR PLAN OF M-1
SCALE 1:50 MTS

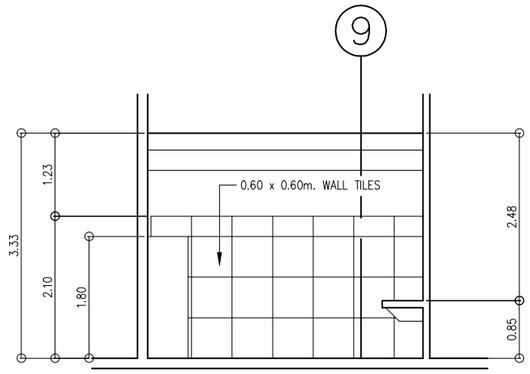


1A A7 A12 M-1 TOILET
SECTION THRU-1A
SCALE 1:50 MTS

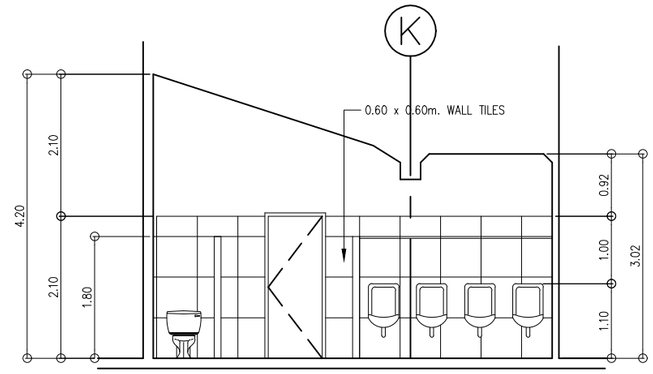


1B A7 A12 M-1 TOILET
SECTION THRU-2A
SCALE 1:50 MTS

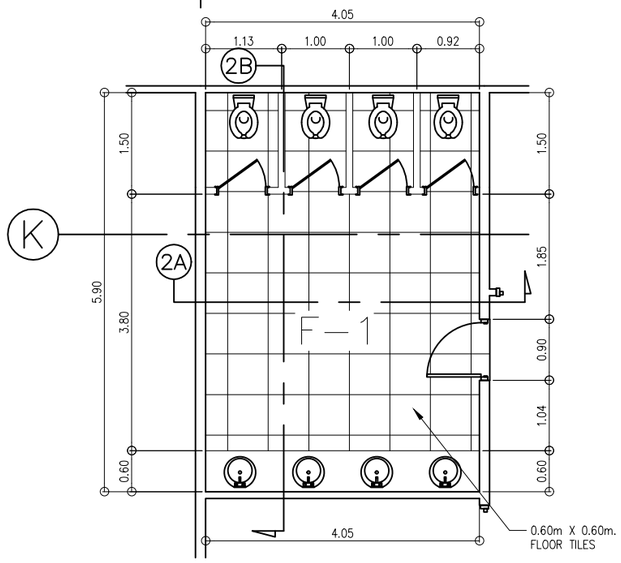


2 A7 A12 FLOOR PLAN OF F-1
SCALE 1:50 MTS

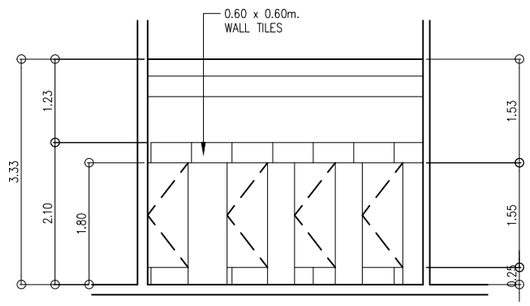


2A A7 A12 F-1 TOILET
SECTION THRU-2A
SCALE 1:50 MTS

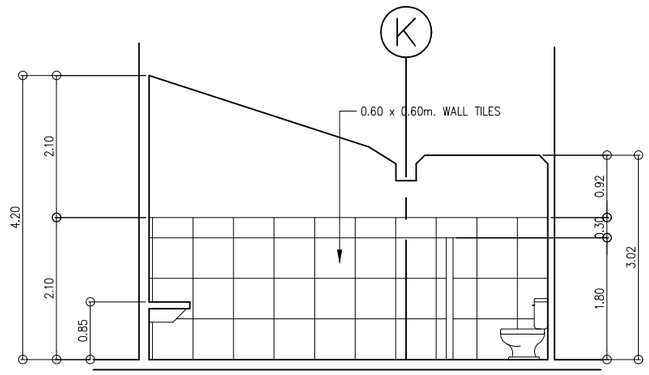


2B A7 A12 F-1 TOILET
SECTION THRU-2B
SCALE 1:50 MTS

| OWNER : | PROJECT : | DESIGN BY: | SUBMITTED BY: | RECOMMENDING APPROVAL: | APPROVED BY : | SHEET CONTENT : | SHEET NO : |
|---|---|---|---|---|---|---|---|
| **PHILIPPINE SPORTS COMMISSION**<br>RMSC, PABLO OCAMPO SR. ST, MALATE, MANILA | **NINOY AQUINO STADIUM REHABILITATION PROJECT** | DRAWN BY: | ENGR. PEDRO I. PINEDA JR.<br>HEAD - ENGINEERING UNIT | DIR. MERLITA R. IBAY<br>DEPUTY EXECUTIVE DIRECTOR | HON. WILLIAM I. RAMIREZ<br>CHAIRMAN | MALE–1 TOILET FLOOR PLAN<br>FEMALE–1 TOILET FLOOR PLAN<br>MALE–1 TOILET ELEV./SEC.<br>FEMALE–1 TOILET ELEV./SEC. | A<br>7 12 |
| | | CHECK BY: | | | | | |
| | RMSC, PABLO OCAMPO SR. ST, MALATE, MANILA | DATE: | | | | | |

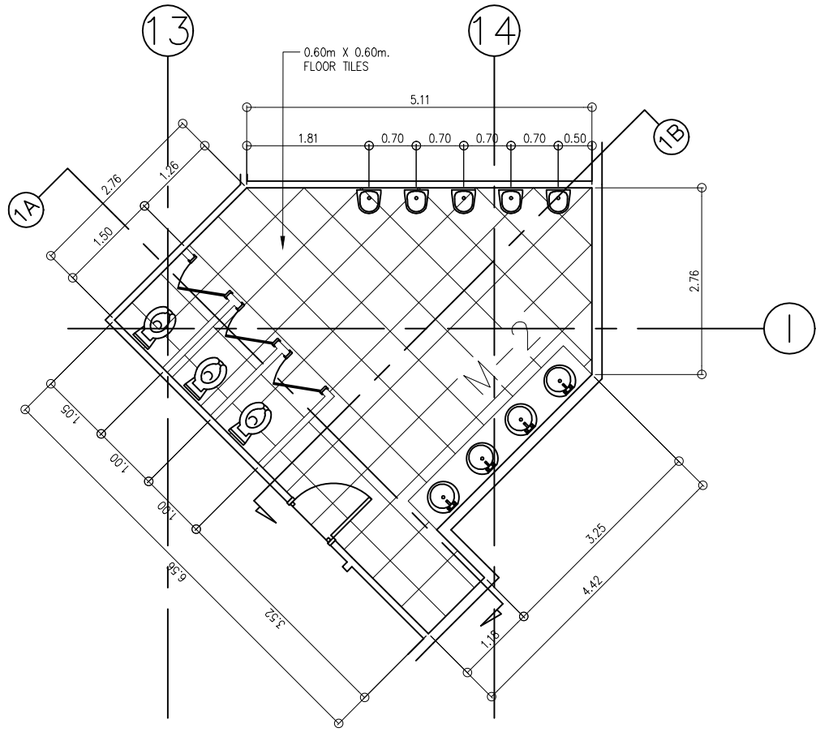


1 A8 A12 FLOOR PLAN OF M-2
SCALE 1:50 MTS

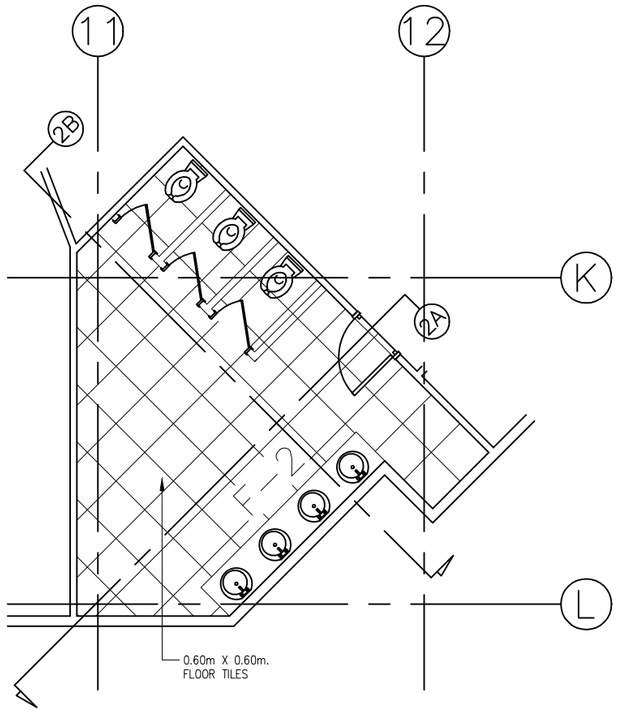


2 A8 A12 FLOOR PLAN OF F-2
SCALE 1:50 MTS

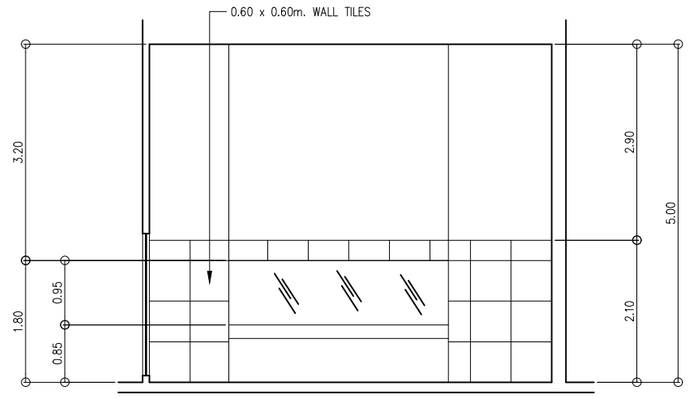


F-2 TOILET
2A A8 A12 SECTION THRU-2A
SCALE 1:50 MTS

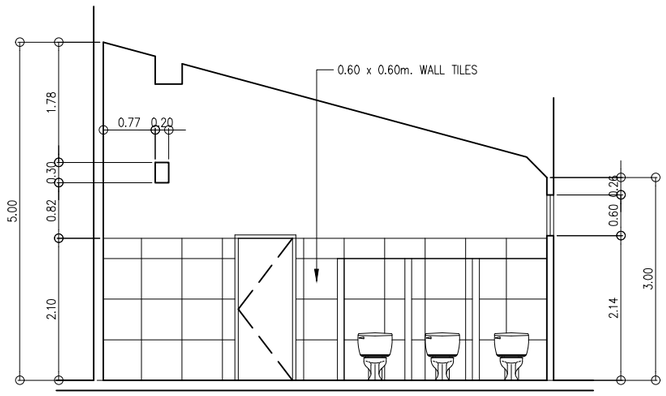


M-2 TOILET
1A A8 A12 SECTION THRU-1A
SCALE 1:50 MTS

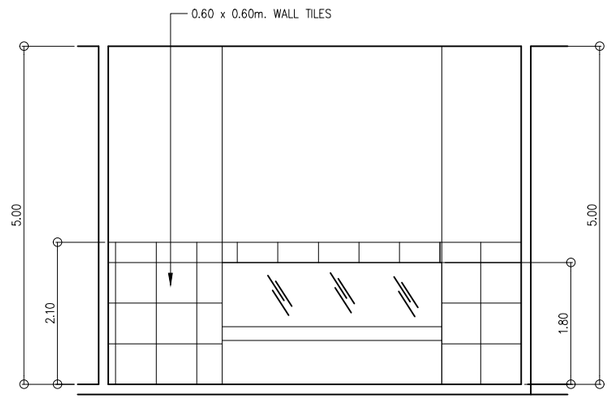


M-2 TOILET
1B A8 A12 SECTION THRU-1B
SCALE 1:50 MTS

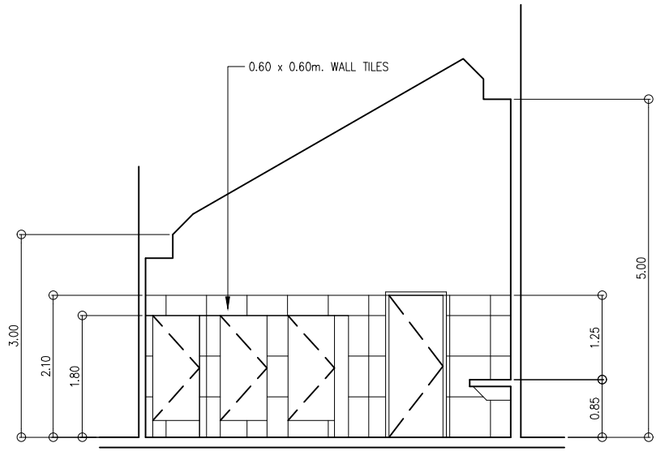


F-2 TOILET
2B A8 A12 SECTION THRU-2A
SCALE 1:50 MTS

| OWNER : | PROJECT : | DESIGN BY: | SUBMITTED BY: | RECOMMENDING APPROVAL: | APPROVED BY : | SHEET CONTENT : | SHEET NO : |
|---|---|---|---|---|---|---|---|
| **PHILIPPINE SPORTS COMMISSION**<br>RMSC, PABLO OCAMPO SR. ST, MALATE, MANILA | **NINOY AQUINO STADIUM REHABILITATION PROJECT** | DRAWN BY: | ENGR. PEDRO I. PINEDA JR.<br>HEAD - ENGINEERING UNIT | DIR. MERLITA R. IBAY<br>DEPUTY EXECUTIVE DIRECTOR | HON. WILLIAM I. RAMIREZ<br>CHAIRMAN | MALE-2 TOILET FLOOR PLAN<br>FEMALE-2 TOILET FLOOR PLAN<br>MALE-2 TOILET ELEV./SEC.<br>FEMALE-2 TOILET ELEV./SEC. | A<br>8 12 |
| | | CHECK BY: | | | | | |
| | RMSC, PABLO OCAMPO SR. ST, MALATE, MANILA | DATE: | | | | | |

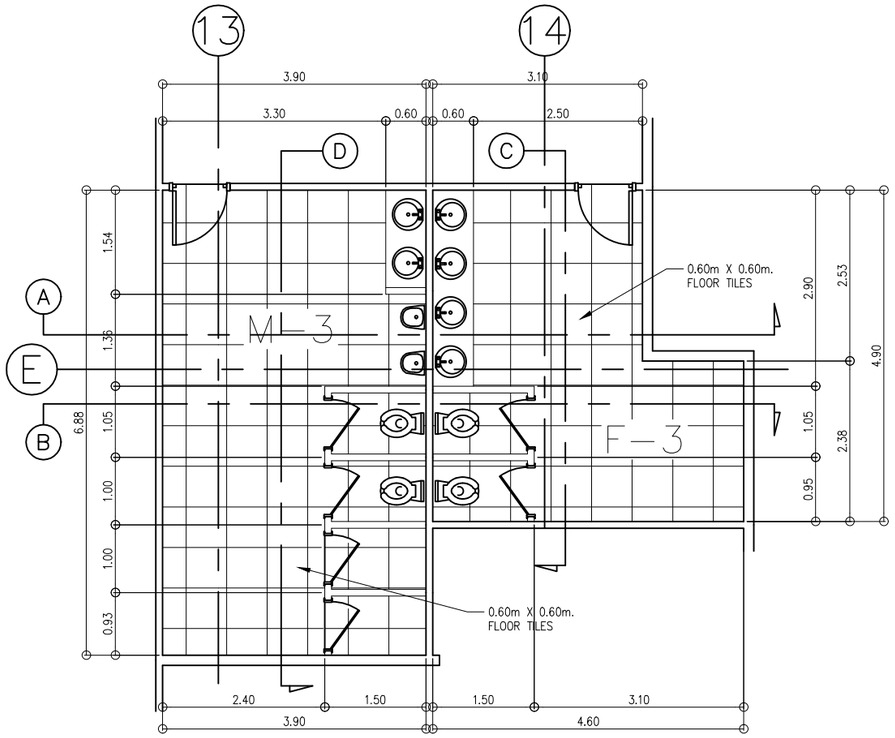


1 A9 A12 FLOOR PLAN OF M-3 & F-3
SCALE 1:50 MTS

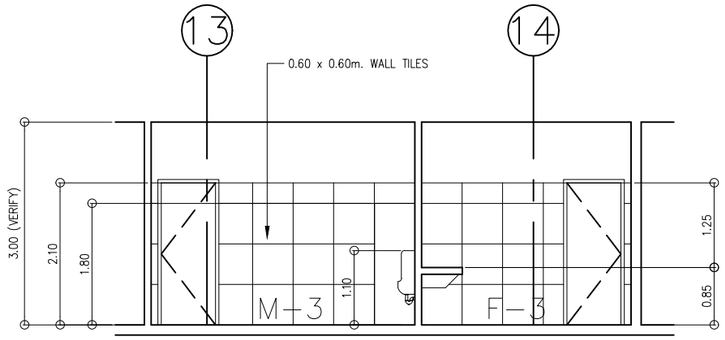


M-3 & F-3 TOILET
A A9 A12 SECTION THRU-A
SCALE 1:50 MTS

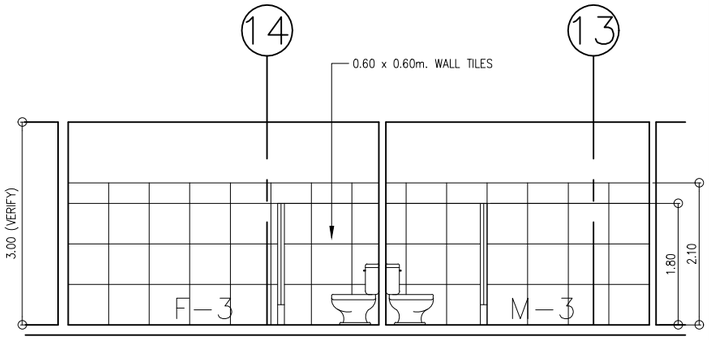


M-3 & F-3 TOILET
B A9 A12 SECTION THRU-B
SCALE 1:50 MTS

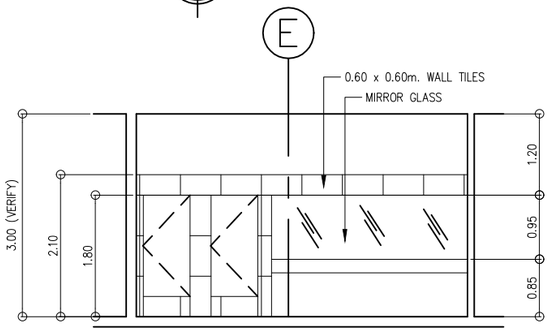


F-3 TOILET
C A9 A12 SECTION THRU-C
SCALE 1:50 MTS

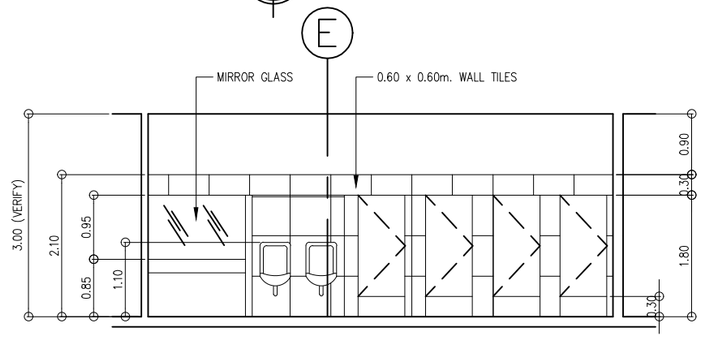


M-3 TOILET
D A9 A12 SECTION THRU-D
SCALE 1:50 MTS

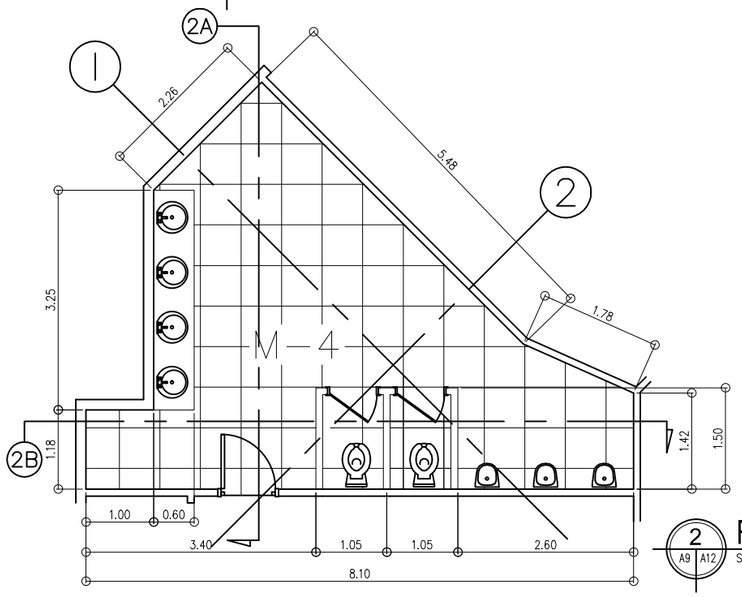


2 A9 A12 FLOOR PLAN OF M-4
SCALE 1:50 MTS

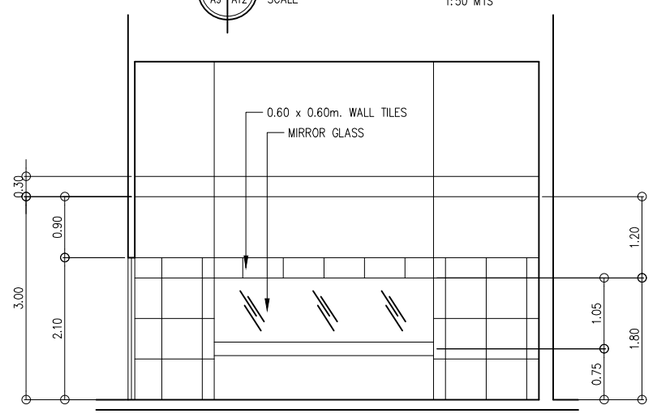


M-4 TOILET
2A A9 A12 SECTION THRU-2A
SCALE 1:50 MTS

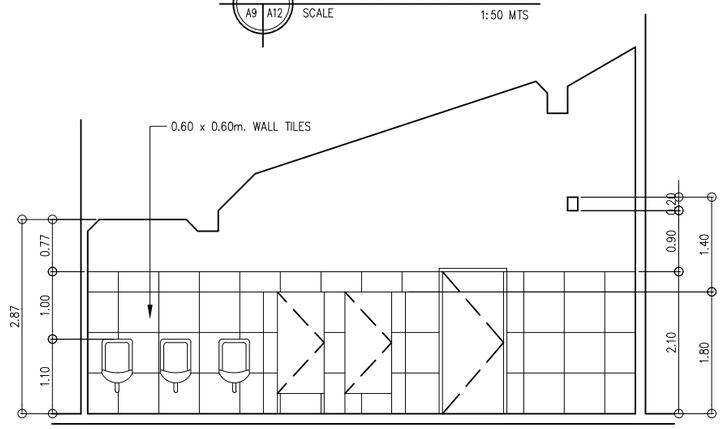


M-4 TOILET
2B A9 A12 SECTION THRU-2B
SCALE 1:50 MTS

| OWNER : | PROJECT : | DESIGN BY: | SUBMITTED BY: | RECOMMENDING APPROVAL: | APPROVED BY : | SHEET CONTENT : | SHEET NO : |
|---|---|---|---|---|---|---|---|
| **PHILIPPINE SPORTS COMMISSION**<br>RMSC, PABLO OCAMPO SR. ST, MALATE, MANILA | **NINOY AQUINO STADIUM REHABILITATION PROJECT** | DRAWN BY: | ENGR. PEDRO I. PINEDA JR.<br>HEAD - ENGINEERING UNIT | DIR. MERLITA R. IBAY<br>DEPUTY EXECUTIVE DIRECTOR | HON. WILLIAM I. RAMIREZ<br>CHAIRMAN | MALE-3 TOILET FLOOR PLAN<br>FEMALE-3 TOILET FLOOR PLAN<br>MALE-4 TOILET FLOOR PLAN<br>MALE-3 TOILET ELEV./SEC.<br>FEMALE-3 TOILET ELEV./SEC.<br>MALE-4 TOILET ELEV./SEC. | A<br>9 12 |
| | | CHECK BY: | | | | | |
| | RMSC, PABLO OCAMPO SR. ST, MALATE, MANILA | DATE: | | | | | |

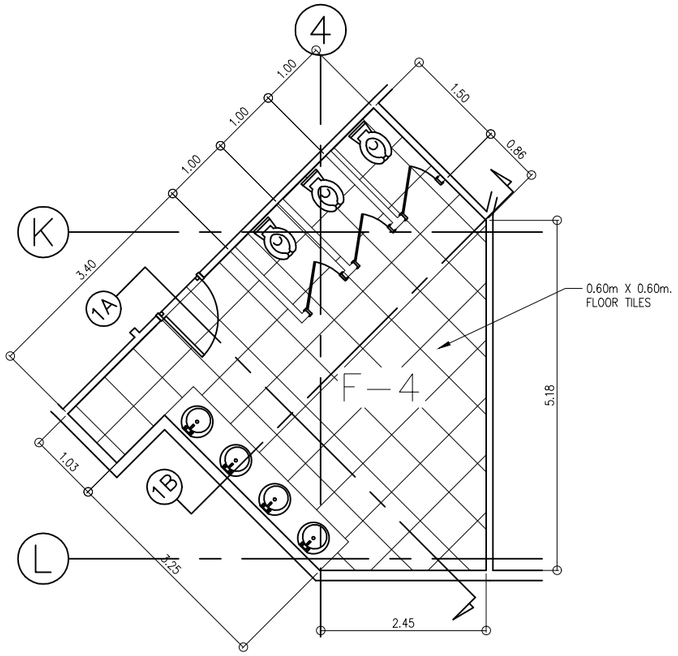


1 A10 A12 FLOOR PLAN OF F-4
SCALE 1:50 MTS

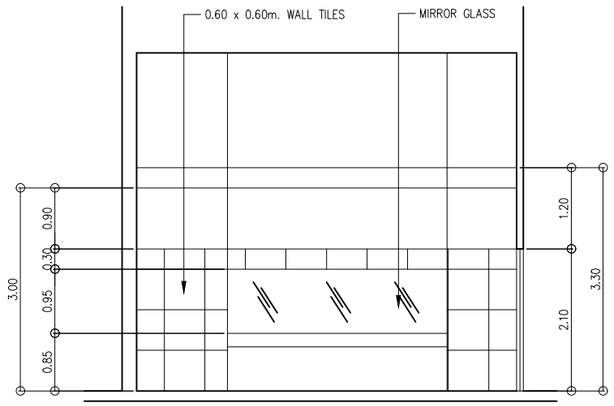


F-4 TOILET
1A A10 A12 SECTION THRU-1A
SCALE 1:50 MTS

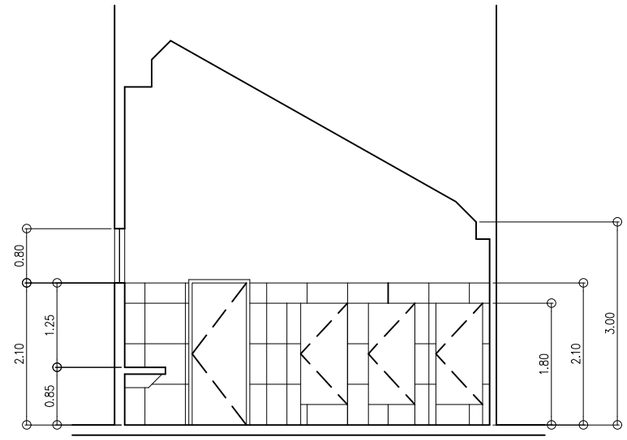


F-4 TOILET
1B A10 A12 SECTION THRU-1B
SCALE 1:50 MTS

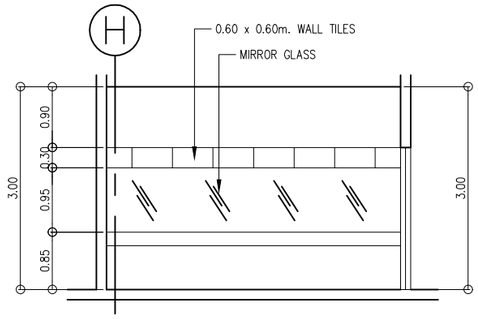


F-5 TOILET
2A A10 A12 SECTION THRU-2A
SCALE 1:50 MTS

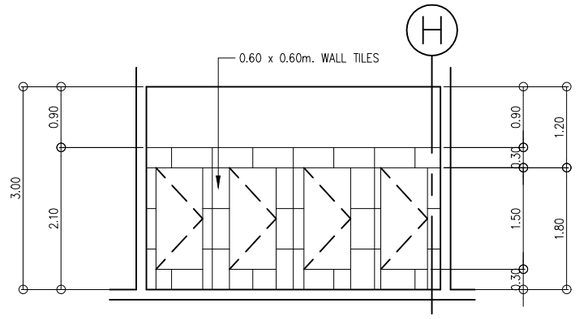


F-5 TOILET
2B A10 A12 SECTION THRU-2B
SCALE 1:50 MTS

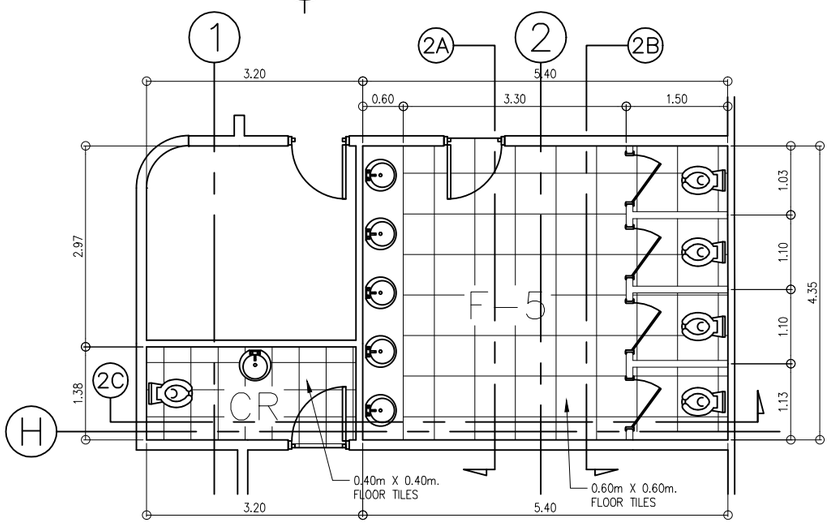


2 A10 A12 FLOOR PLAN OF F-5 & VENUE MANAGER CR.
SCALE 1:50 MTS

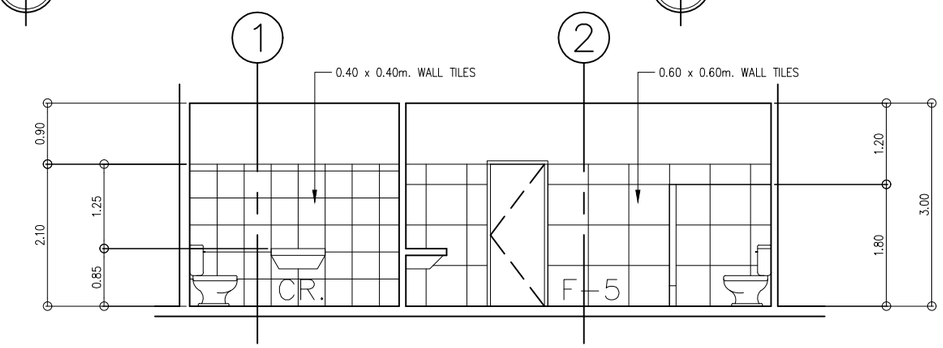


F-5 TOILET & VENUE MGR. CR.
2C A10 A12 SECTION THRU-2C
SCALE 1:50 MTS

| OWNER : | PROJECT : | DESIGN BY: | SUBMITTED BY: | RECOMMENDING APPROVAL: | APPROVED BY : | SHEET CONTENT : | SHEET NO : |
|---|---|---|---|---|---|---|---|
| **PHILIPPINE SPORTS COMMISSION**<br>RMSC, PABLO OCAMPO SR. ST, MALATE, MANILA | **NINOY AQUINO STADIUM REHABILITATION PROJECT**<br>RMSC, PABLO OCAMPO SR. ST, MALATE, MANILA | DRAWN BY:<br>CHECK BY:<br>DATE: | ENGR. PEDRO I. PINEDA JR.<br>HEAD - ENGINEERING UNIT | DIR. MERLITA R. IBAY<br>DEPUTY EXECUTIVE DIRECTOR | HON. WILLIAM I. RAMIREZ<br>CHAIRMAN | FEMALE-4 TOILET FLOOR PLAN<br>FEMALE-4 TOILET ELEV./SEC.<br>F-5 TOILET & VENUE MGR. CR. FLR. PLAN<br>F-5 & V. MGR. CR. ELEV./SEC. | A<br>10 12 |

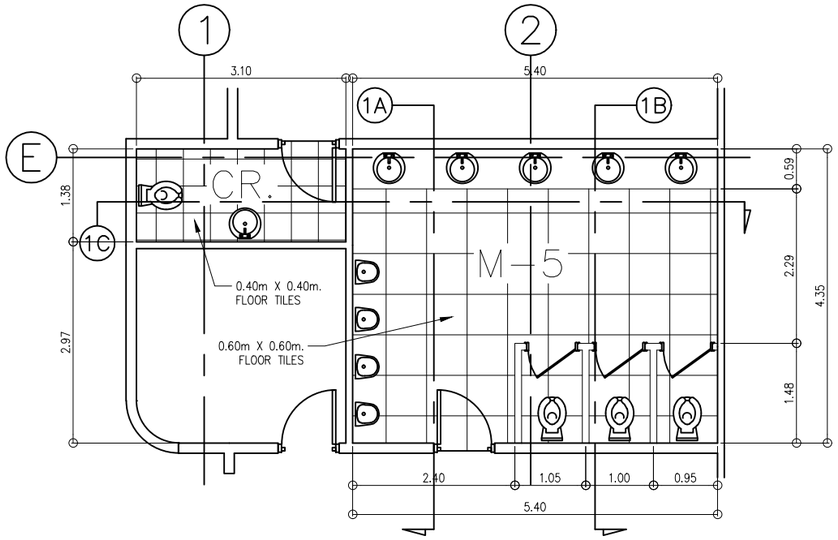


1 A11 A12 FLOOR PLAN OF M-5 & TRIATHLON CR.
SCALE 1:50 MTS

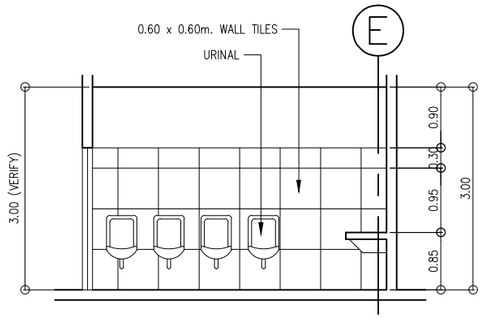


M-5 TOILET
1A A11 A12 SECTION THRU-1A
SCALE 1:50 MTS

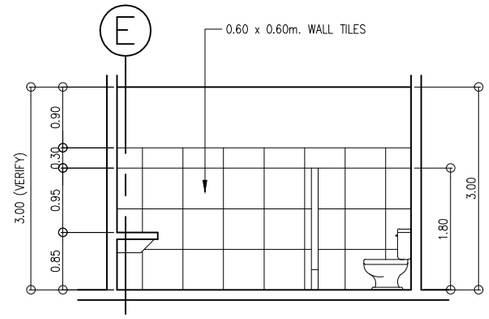


M-5 TOILET
1B A11 A12 SECTION THRU-1B
SCALE 1:50 MTS

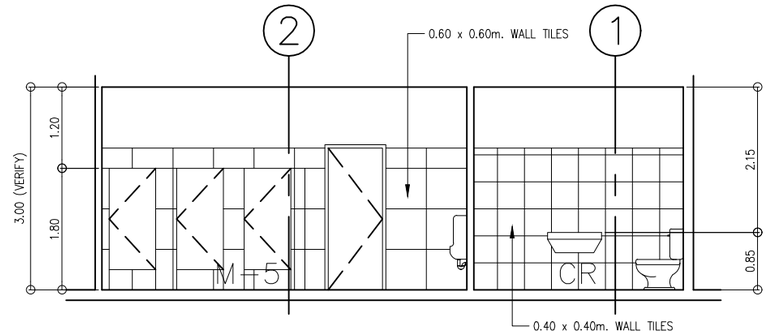


M-5 TOILET & TRIATHLON CR.
1C A11 A12 SECTION THRU-1C
SCALE 1:50 MTS

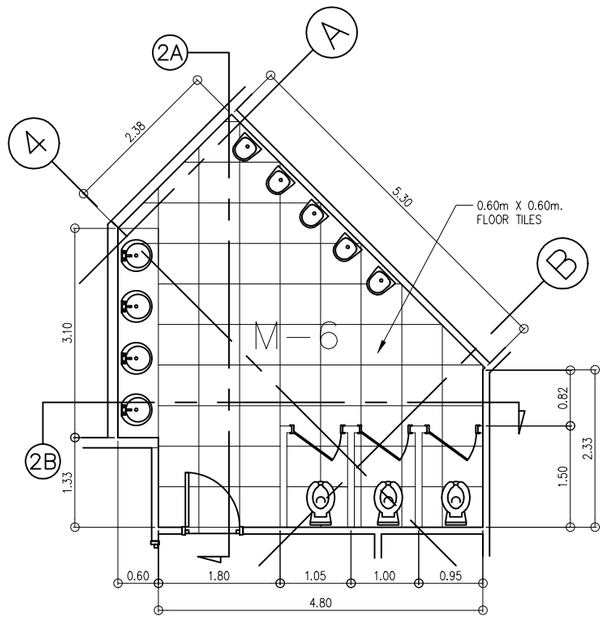


2 A11 A12 FLOOR PLAN OF M-6
SCALE 1:50 MTS

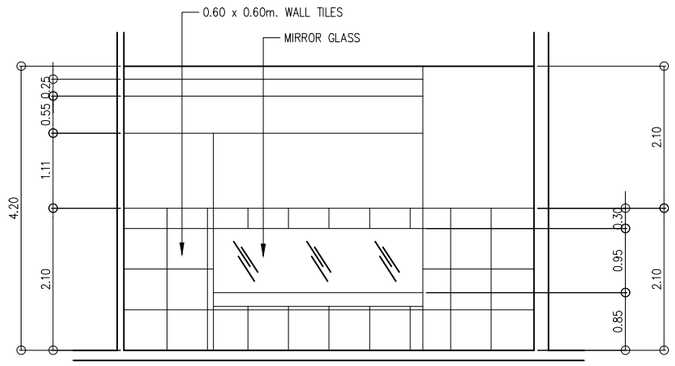


M-6 TOILET
2A A11 A12 SECTION THRU-2A
SCALE 1:50 MTS

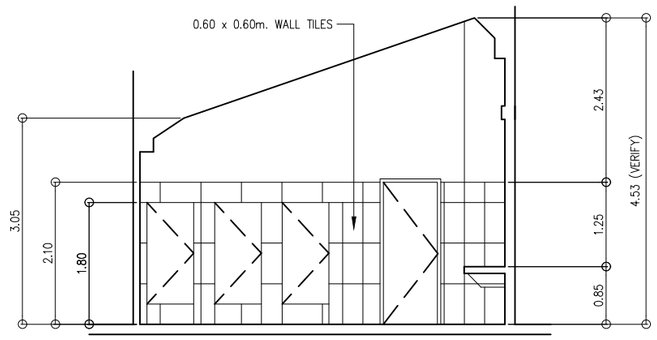


M-6 TOILET
2B A11 A12 SECTION THRU-2B
SCALE 1:50 MTS

| OWNER : | PROJECT : | DESIGN BY: | SUBMITTED BY: | RECOMMENDING APPROVAL: | APPROVED BY : | SHEET CONTENT : | SHEET NO : |
|---|---|---|---|---|---|---|---|
| **PHILIPPINE SPORTS COMMISSION**<br>RMSC, PABLO OCAMPO SR. ST, MALATE, MANILA | **NINOY AQUINO STADIUM REHABILITATION PROJECT** | DRAWN BY: | ENGR. PEDRO I. PINEDA JR.<br>HEAD - ENGINEERING UNIT | DIR. MERLITA R. IBAY<br>DEPUTY EXECUTIVE DIRECTOR | HON. WILLIAM I. RAMIREZ<br>CHAIRMAN | M-5 TOILET & TRIATHLON CR. FLR. PLAN<br>M-5 & TRIATHLON CR. ELEV./SEC.<br>M-6 TOILET FLOOR PLAN<br>M-6 TOILET ELEV./SEC. | A<br>11 12 |
| | | CHECK BY: | | | | | |
| | RMSC, PABLO OCAMPO SR. ST, MALATE, MANILA | DATE: | | | | | |

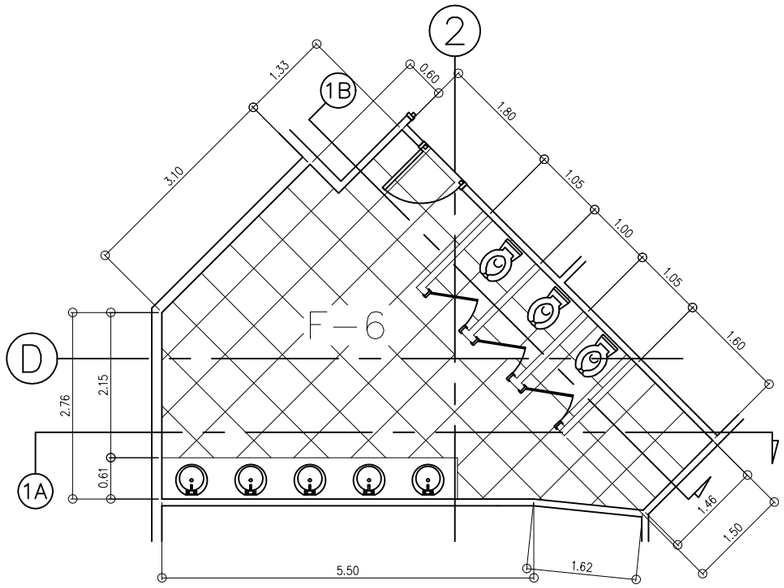


1 A12 A12 FLOOR PLAN OF F-6
SCALE 1:50 MTS

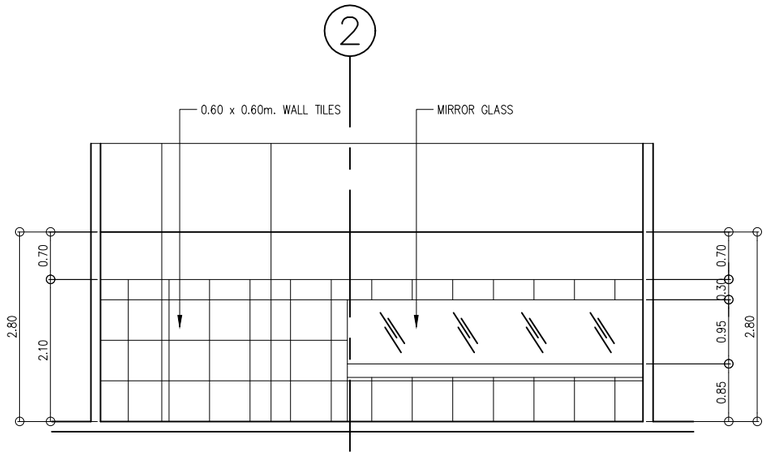


F-6 TOILET
1A A12 A12 SECTION THRU-1A
SCALE 1:50 MTS

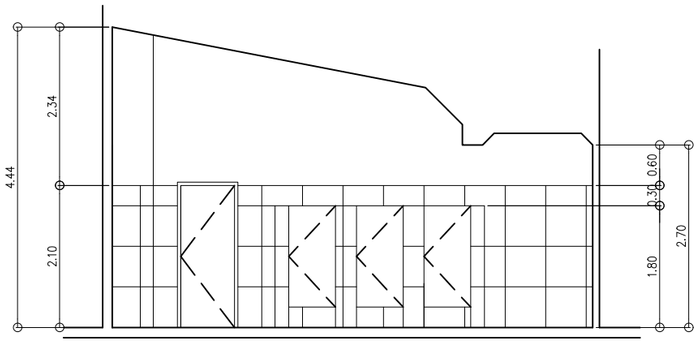


F-6 TOILET
1B A12 A12 SECTION THRU-1B
SCALE 1:50 MTS

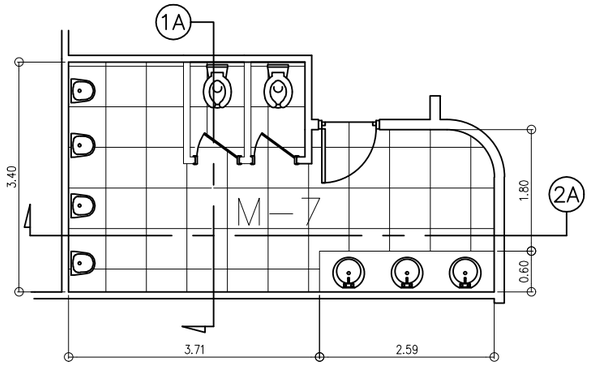


2 A12 A12 FLOOR PLAN OF M-7
SCALE 1:50 MTS

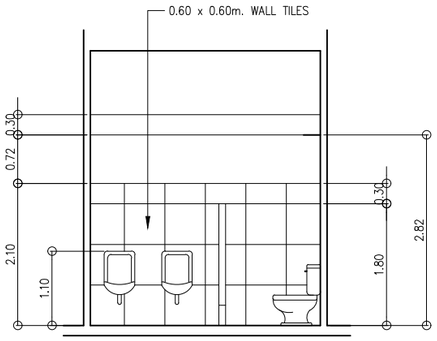


M-7 TOILET
2A A12 A12 SECTION THRU-2A
SCALE 1:50 MTS

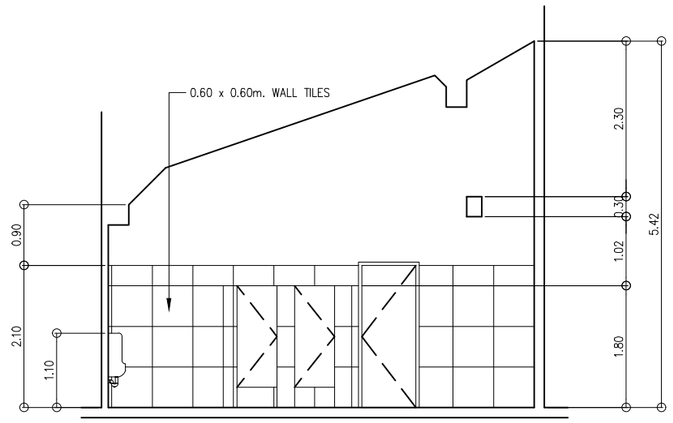


M-7 TOILET
2B A12 A12 SECTION THRU-2A
SCALE 1:50 MTS

| OWNER : | PROJECT : | DESIGN BY: | SUBMITTED BY: | RECOMMENDING APPROVAL: | APPROVED BY : | SHEET CONTENT : | SHEET NO : |
|---|---|---|---|---|---|---|---|
| **PHILIPPINE SPORTS COMMISSION**<br>RMSC, PABLO OCAMPO SR. ST, MALATE, MANILA | **NINOY AQUINO STADIUM REHABILITATION PROJECT** | DRAWN BY: | ENGR. PEDRO I. PINEDA JR.<br>HEAD - ENGINEERING UNIT | DIR. MERLITA R. IBAY<br>DEPUTY EXECUTIVE DIRECTOR | HON. WILLIAM I. RAMIREZ<br>CHAIRMAN | F-6 TOILET FLOOR PLAN<br>F-6 TOILET ELEV./SEC.<br>M-7 TOILET FLOOR PLAN<br>M-7 TOILET ELEV./SEC. | A 12 12 |
| | | CHECK BY: | | | | | |
| | RMSC, PABLO OCAMPO SR. ST, MALATE, MANILA | DATE: | | | | | |

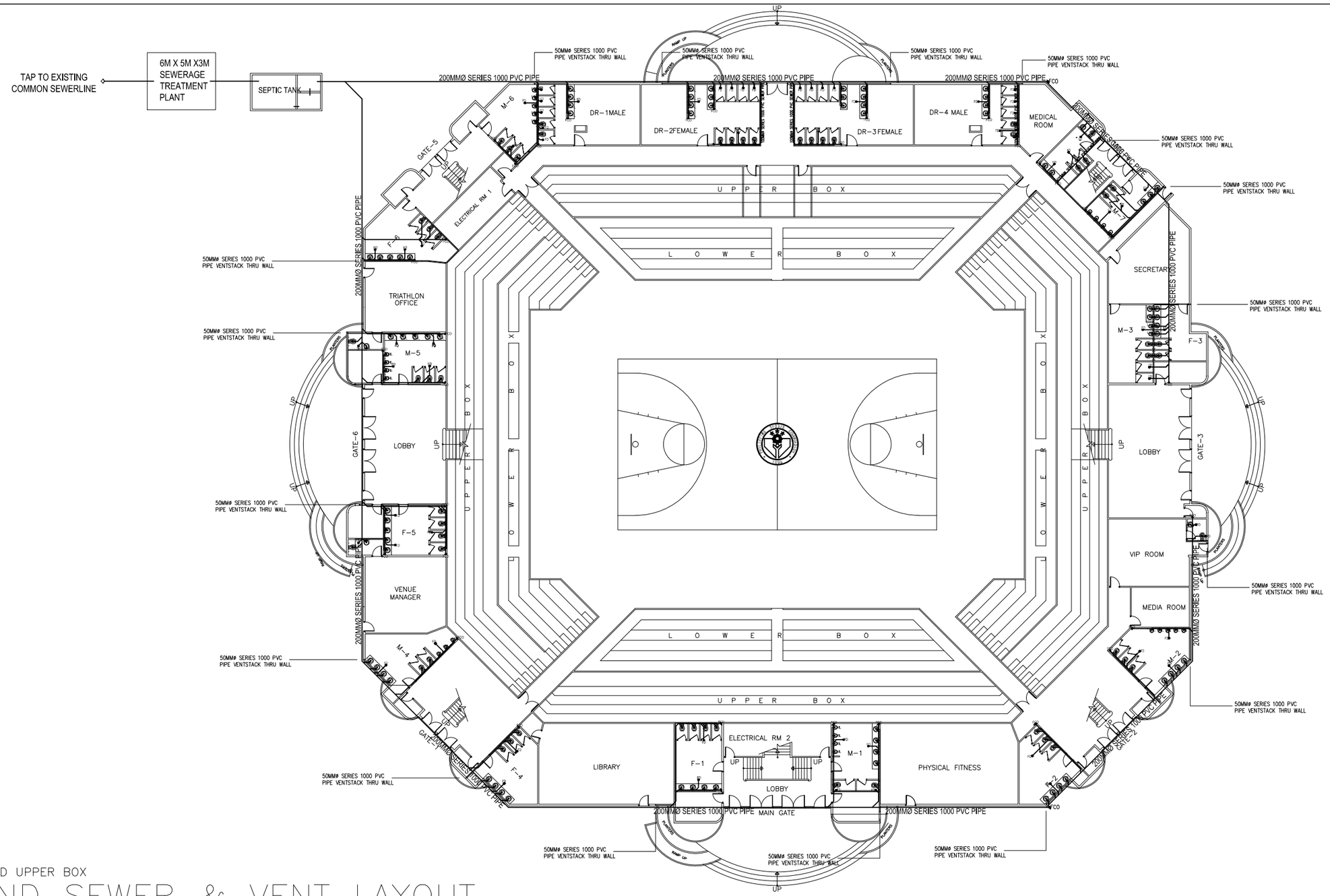


LOWER BOX AND UPPER BOX

# GROUND SEWER & VENT LAYOUT

SCALE: 1:200MTS

| OWNER : | PROJECT : | DESIGN BY: | SUBMITTED BY: | RECOMMENDING APPROVAL: | APPROVED BY : | SHEET CONTENT : | SHEET NO : |
|---|---|---|---|---|---|---|---|
| **PHILIPPINE SPORTS COMMISSION**<br>RMSC, PABLO OCAMPO SR. ST, MALATE, MANILA | **NINOY AQUINO STADIUM REHABILITATION PROJECT** | DRAWN BY: | ENGR. PEDRO I. PINEDA JR.<br>HEAD - ENGINEERING UNIT | DIR. MERLITA R. IBAY<br>DEPUTY EXECUTIVE DIRECTOR | HON. WILLIAM I. RAMIREZ<br>CHAIRMAN | AS SHOWN | SP-1 |
| | | CHECK BY: | | | | | 1 / 4 |
| | RMSC, PABLO OCAMPO SR. ST, MALATE, MANILA | DATE: | | | | | |

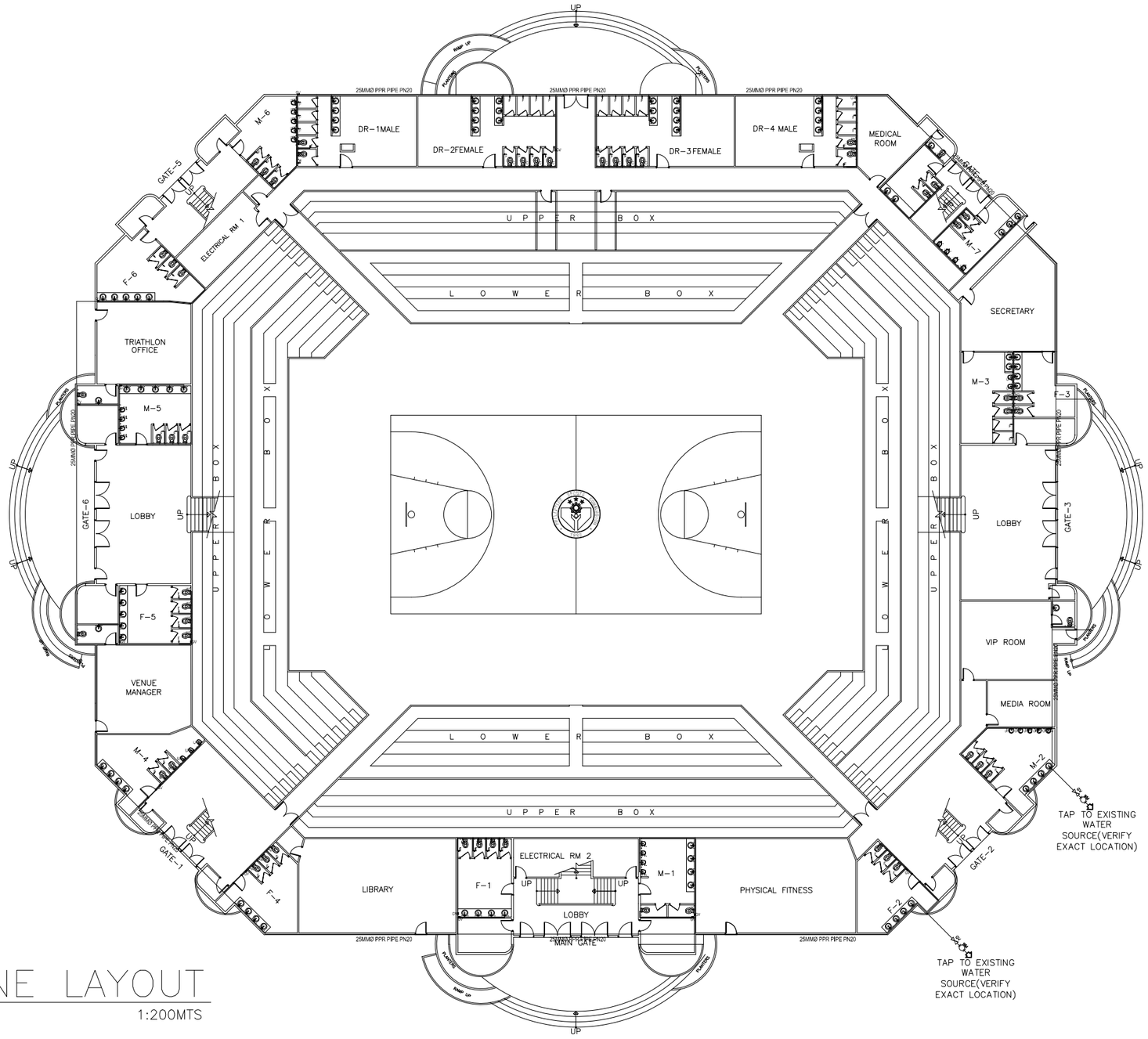


LOWER BOX AND UPPER BOX

# GROUND WATERLINE LAYOUT

SCALE: 1:200MTS

| OWNER : | PROJECT : | DESIGN BY: | SUBMITTED BY: | RECOMMENDING APPROVAL: | APPROVED BY : | SHEET CONTENT : | SHEET NO : |
|---|---|---|---|---|---|---|---|
| **PHILIPPINE SPORTS COMMISSION**<br>RMSC, PABLO OCAMPO SR. ST, MALATE, MANILA | **NINOY AQUINO STADIUM REHABILITATION PROJECT**<br>RMSC, PABLO OCAMPO SR. ST, MALATE, MANILA | DRAWN BY:<br>CHECK BY:<br>DATE: | ENGR. PEDRO I. PINEDA JR.<br>HEAD - ENGINEERING UNIT | DIR. MERLITA R. IBAY<br>DEPUTY EXECUTIVE DIRECTOR | HON. WILLIAM I. RAMIREZ<br>CHAIRMAN | AS SHOWN | SP-2<br>2 / 4 |

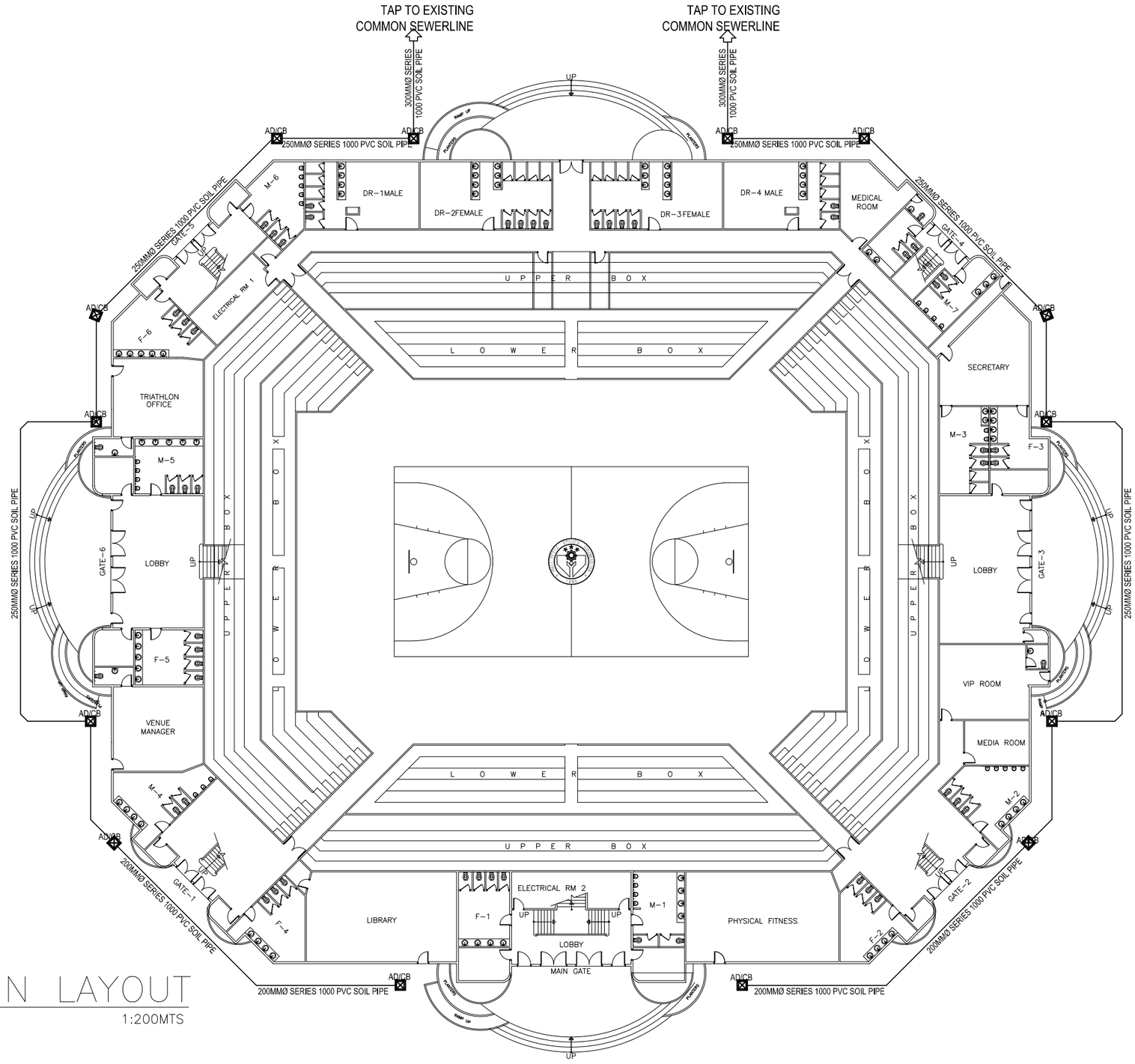


LOWER BOX AND UPPER BOX

# GROUND STORMDRAIN LAYOUT

SCALE: 1:200MTS

| OWNER : | PROJECT : | DESIGN BY: | SUBMITTED BY: | RECOMMENDING APPROVAL: | APPROVED BY : | SHEET CONTENT : | SHEET NO : |
|---|---|---|---|---|---|---|---|
| **PHILIPPINE SPORTS COMMISSION**<br>RMSC, PABLO OCAMPO SR. ST, MALATE, MANILA | **NINOY AQUINO STADIUM REHABILITATION PROJECT**<br>RMSC, PABLO OCAMPO SR. ST, MALATE, MANILA | DRAWN BY:<br>CHECKED BY:<br>DATE: | ENGR. PEDRO I. PINEDA JR.<br>HEAD - ENGINEERING UNIT | DIR. MERLITA R. IBAY<br>DEPUTY EXECUTIVE DIRECTOR | HON. WILLIAM I. RAMIREZ<br>CHAIRMAN | AS SHOWN | SP-3<br>3 \| 4 |

# GENERAL NOTES :

1. ALL PLUMBING WORKS HEREIN SHALL BE EXECUTED IN ACCORDANCE WITH THE REQUIREMENTS OF THE NATIONAL PLUMBING CODE, AND THE RULES AND REGULATIONS OF RIZAL.
2. COORDINATE THE DRAWINGS WITH OTHER RELATED DRAWINGS AND SPECIFICATIONS. THE ENGINEER SHALL BE NOTIFIED IMMEDIATELY OF ANY DISCREPANCY FOUND THEREIN.
3. PIPES SHALL BE INSTALLED AS INDICATED. ANY RELOCATION REQUIRED FOR PROPER EXECUTION OF OTHER TRADES SHALL BE WITH PRIOR APPROVAL OF THE ARCHITECT OR ENGINEER.
4. SANITARY AND DRAINAGE LINES SHALL HAVE A MINIMUM SLOPE OF 1%.
5. ALL INDIVIDUAL BRANCHES SHALL BE VENTED UNLESS OTHERWISE NOTED.
6. DIMENSIONS ARE IN MILLIMETER (mm) UNLESS OTHERWISE INDICATED.
7. SIZES OF WATER SUPPLY PIPES TO FIXTURES SHALL BE IN ACCORDANCE WITH MANUFACTURER'S INSTRUCTIONS.
8. THE CONTRACTOR SHALL VERIFY ALL EXISTING UTILITIES AT SITE AND COORDINATE THE WORKS WITH SEWER EFFLUENT DISPOSAL AND WATERLINE SERVICES CONNECTING POINT.
9. THE WORK THROUGHOUT SHALL BE EXECUTED IN THE BEST AND MOST THOROUGH MANNER KNOWN TO SATISFACTION OF ARCHITECT AND OR ENGINEER.
10. WATER LINES SHALL BE TESTED AT 150 PSI FOR A PERIOD OF TWO (2) HOURS BEFORE BACKFILLING OR COVERING.
11. PIPES FOR SANITARY LINES SHALL BE PVC PIPES SERIES 1000 (HIGH IMPACT) AS MANUFACTURED BY ATLANTA, NELTEX, EMERALD OR OTHER APPROVED EQUAL BRANDS.
12. PIPES FOR VENT LINES SHALL BE PVC PIPES SERIES 1000 AS MANUFACTURED BY ATLANTA, NELTEX, EMERALD OR OTHER APPROVED EQUAL BRANDS.
13. ALL WATER LINES SHALL BE HYDRAULICALLY TESTED TO A MINIMUM PRESSURE OF 150 PSI AND SEWER/WASTE LINES SHALL BE TESTED FOR ANY LEAKS.

# LEGEND & SYMBOLS :

| | | | |
|---|---|---|---|
| | COLD WATER LINE | FD | FLOOR DRAIN |
| | SANITARY VENT LINE | GPM | GALLON PER MINUTE |
| | DRAINAGE LINE | HZ | HERTZ |
| | SANITARY LINE | KW | KILOWATT |
| | FLOOR CLEANOUT | PH | PHASE |
| | GATE VALVE | PSI | POUND PER SQUARE INCH |
| | UNION | RAC | RUNNING ABOVE CEILING |
| AD/CB | AREA DRAIN/CATCH BASIN | SSK | SLOP SINK |
| CWL | COLD WATER LINE | SP | SOIL PIPE |
| DP | DRAIN PIPE | TYP. | TYPICAL |
| EXST. | EXISTING | U/G | UNDERGROUND |
| FCO | FLOOR CLEANOUT | V | VENT LINE |
| | | VAC | VENT AT CEILING |
| | | WP | WASTE PIPE |

# MATERIAL SPECIFICATIONS:

DRAINAGE, WASTE AND VENT (DWV) – PVC PIPE AS MANUFACTURED BY MOLDEX , EMERALD, OR APPROVED EQUAL

STORM DRAINAGE – 50 TO 150ø SHALL BE POLYVINYL CHLORIDE (PVC) PIPE, SERIES 1000, MOLDEX, EMERALD OR APPROVED EQUAL.

– 200ø AND BELOW SHALL BE NON–REINFORCED CONCRETE PIPE CONFORMING TO ASTM–C14. 250ø AND LARGER SHALL BE REINFORCED CONCRETE PIPE CONFORMING TO ASTM–76.

WATER LINES: – POLYPROPYLENE PIPE COPOLYMER (PPR) TYPE 3 BY VESBO, GEORGE FISHER, UNITEC OR APPROVED EQUAL (BEYOND PUMP ROOM)

G.I. PIPE SCH. 40 FOR PIPING WITHIN PUMP ROOM AND PIPING FROM STREET MAIN CONNECTION.

VALVES: – AS MANUFACTURED BY "CRANE" OR "KITZ".

WATER METER: – AS MANUFACTURED BY "ASAHI" OR "BADGER".

DRAINS: – AS MANUFACTURED BY "METMA" OR "ASA".

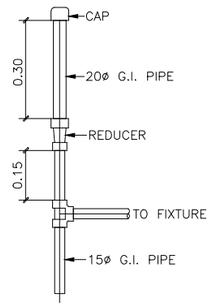


1 / P–1 AIR CAP CHAMBER DETAIL
NOT TO SCALE

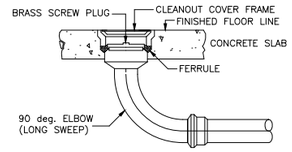


2 / P–1 FLOOR CLEANOUT DETAIL
NOT TO SCALE

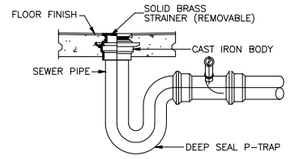


3 / P–1 FLOOR DRAIN DETAIL
NOT TO SCALE

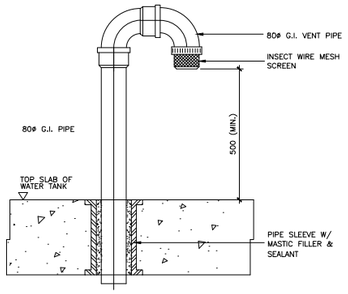


4 / P–1 DETAIL OF TANK VENT
NOT TO SCALE

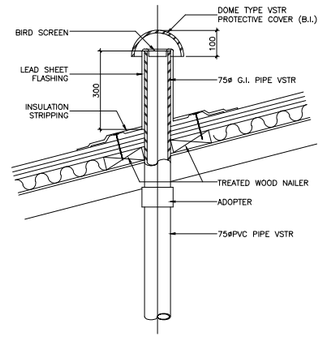


5 / P–1 DETAIL OF VENT STACK THRU ROOF
NOT TO SCALE

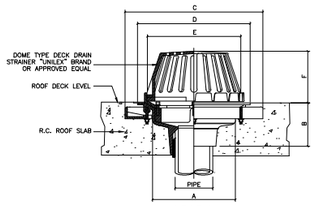


SECTION

DIMENSION TABLE (MM)

| PIPE SIZE | WT. LBS. | A | B | C | D | E | F |
|---|---|---|---|---|---|---|---|
| 100 | 19 | 184 | 100 | 300 | 330 | 190 | 110 |

6 / P–1 DETAIL OF DECK DRAIN
NOT TO SCALE

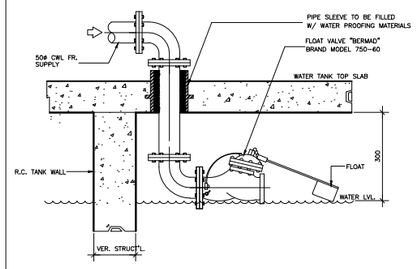


7 / P–1 DETAIL OF FLOAT VALVE
NOT TO SCALE

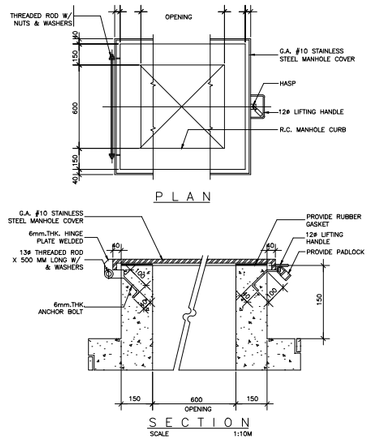


8 / P–1 DETAIL OF MANHOLE COVER
NOT TO SCALE

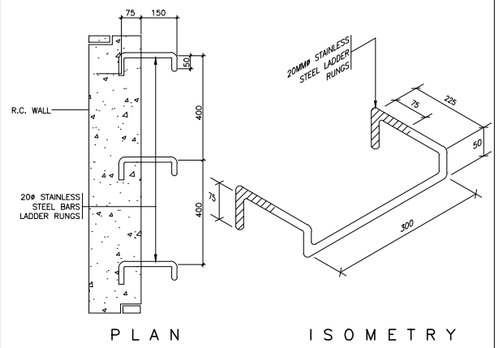


9 / P–1 DETAIL OF LADDER RUNGS
NOT TO SCALE

| PIPE SIZE (INLET/OUTLET) | AREA DRAIN/CATCH BASIN SIZE | | |
|---|---|---|---|
| | A | B | C |
| 200ø | 700 | 400 | 150 |
| 250ø | 750 | 450 | 150 |
| 300ø | 800 | 500 | 150 |

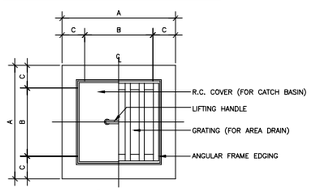


P L A N

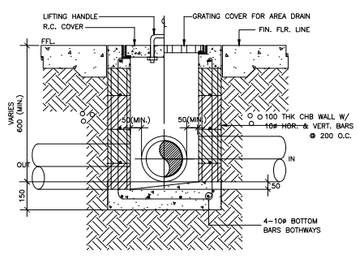


S E C T I O N

10 / P–1 DETAIL OF CATCH BASIN
NOT TO SCALE

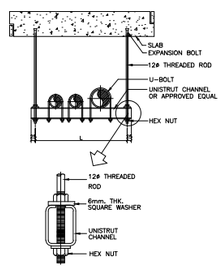


STANDARD TRAPEZE HANGERS

STANDARD VERTICAL CLAMP TABLE OF DIMENSIONS

| D | A | B | C | W x T | K x L |
|---|---|---|---|---|---|
| 60 | 250 | 114 | 48 | 40 x 6 | M12 x 40 |
| 76 | 266 | 130 | 48 | 50 x 6 | M12 x 40 |
| 114 | 304 | 168 | 48 | 50 x 6 | M12 x 40 |
| 165 | 468 | 254 | 75 | 75 x 10 | M16 x 60 |
| 219 | 519 | 305 | 75 | 75 x 10 | M16 x 60 |
| 273 | 573 | 359 | 75 | 75 x 10 | M16 x 60 |
| 324 | 624 | 410 | 75 | 75 x 10 | M16 x 60 |

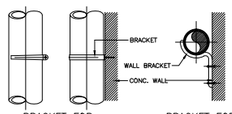


BRACKET FOR VERTICAL PIPE

BRACKET FOR HORIZONTAL PIPE

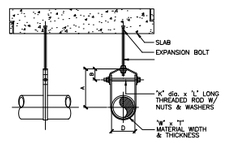


STANDARD CLEVIS HANGERS TABLE OF DIMENSIONS

| D | A | B | R | W x T | K x L |
|---|---|---|---|---|---|
| 34 | 80 | 45 | 12 | 25 x 3 | M10 x 70 |
| 43 | 90 | 50 | 12 | 25 x 3 | M10 x 80 |
| 48 | 95 | 50 | 12 | 25 x 3 | M10 x 85 |
| 60 | 105 | 55 | 12 | 25 x 3 | M10 x 100 |
| 76 | 115 | 60 | 14 | 40 x 6 | M12 x 115 |
| 89 | 125 | 60 | 14 | 40 x 6 | M12 x 130 |
| 114 | 145 | 65 | 18 | 40 x 6 | M16 x 160 |
| 140 | 165 | 75 | 18 | 40 x 6 | M16 x 190 |
| 165 | 185 | 80 | 18 | 40 x 6 | M16 x 210 |

11 / P–1 DETAIL OF PIPE HANGERS, CLAMPS & BRACKETS
NOT TO SCALE

| OWNER : | PROJECT : | DESIGN BY: | SUBMITTED BY: | RECOMMENDING APPROVAL: | APPROVED BY : | SHEET CONTENT : | SHEET NO : |
|---|---|---|---|---|---|---|---|
| **PHILIPPINE SPORTS COMMISSION** RMSC, PABLO OCAMPO SR. ST, MALATE, MANILA | **NINOY AQUINO STADIUM REHABILITATION PROJECT** | DRAWN BY: | ENGR. PEDRO I. PINEDA JR. | DIR. MERLITA R. IBAY | HON. WILLIAM I. RAMIREZ | AS SHOWN | SP-4 |
| | RMSC, PABLO OCAMPO SR. ST, MALATE, MANILA | CHECK BY: | HEAD - ENGINEERING UNIT | DEPUTY EXECUTIVE DIRECTOR | CHAIRMAN | | 4 / 4 |
| | | DATE: | | | | | |

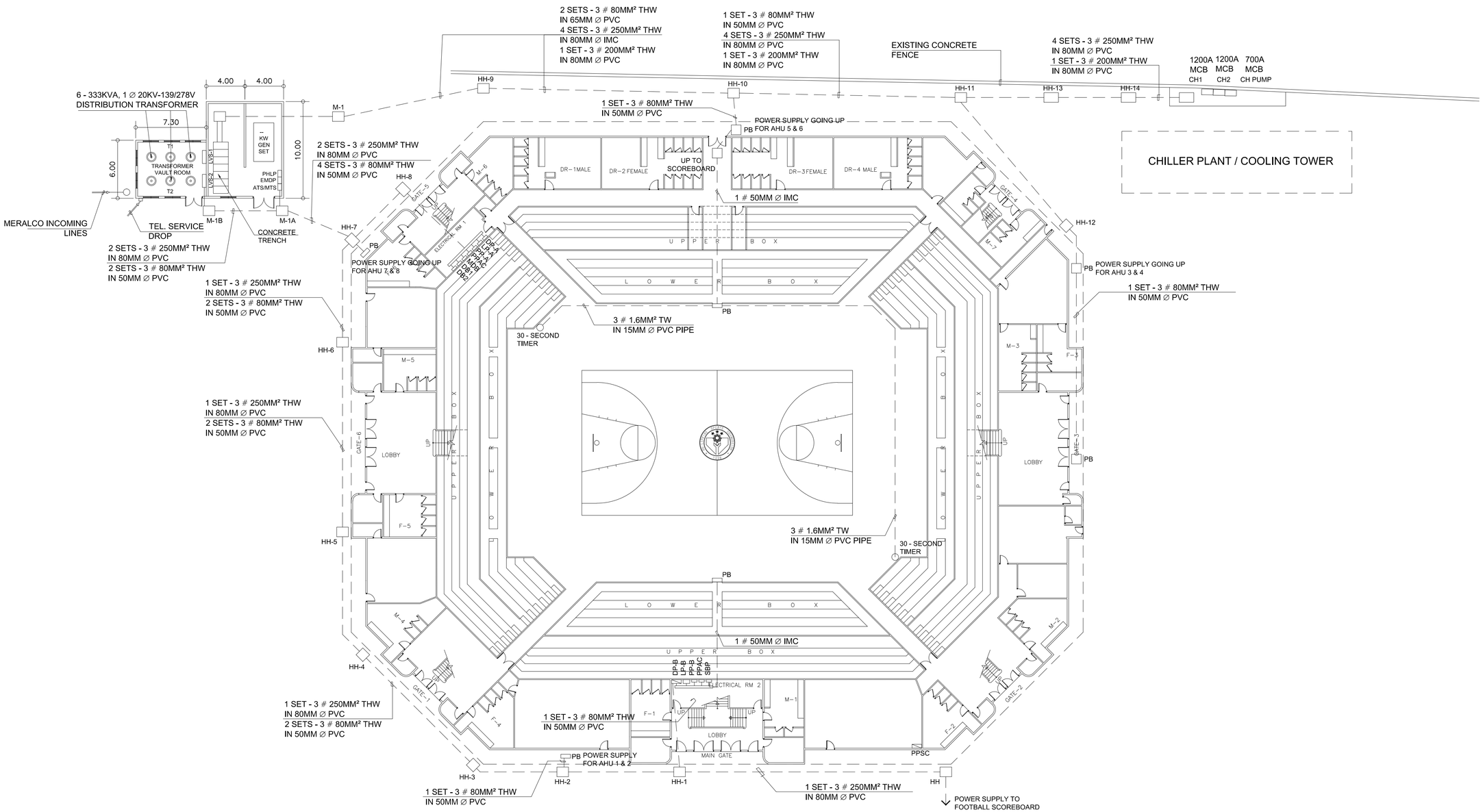


# GROUND FLOOR PLAN - FEEDER LINE LAYOUT

SCALE 1:200

0 1 2 3 4 5 10 20 30

| OWNER : | PROJECT : | DESIGN BY: | SUBMITTED BY: | RECOMMENDING APPROVAL: | APPROVED BY : | SHEET CONTENT : | SHEET NO : |
|---|---|---|---|---|---|---|---|
| **PHILIPPINE SPORTS COMMISSION**<br>RMSC, PABLO OCAMPO SR. ST, MALATE, MANILA | **NINOY AQUINO STADIUM REHABILITATION PROJECT** | DRAWN BY: | ENGR. PEDRO I. PINEDA JR.<br>HEAD - ENGINEERING UNIT | DIR. MERLITA R. IBAY<br>DEPUTY EXECUTIVE DIRECTOR | HON. WILLIAM I. RAMIREZ<br>CHAIRMAN | AS SHOWN | E<br>1 22 |
| | RMSC, PABLO OCAMPO SR. ST, MALATE, MANILA | CHECK BY:<br>DATE: | | | | | |

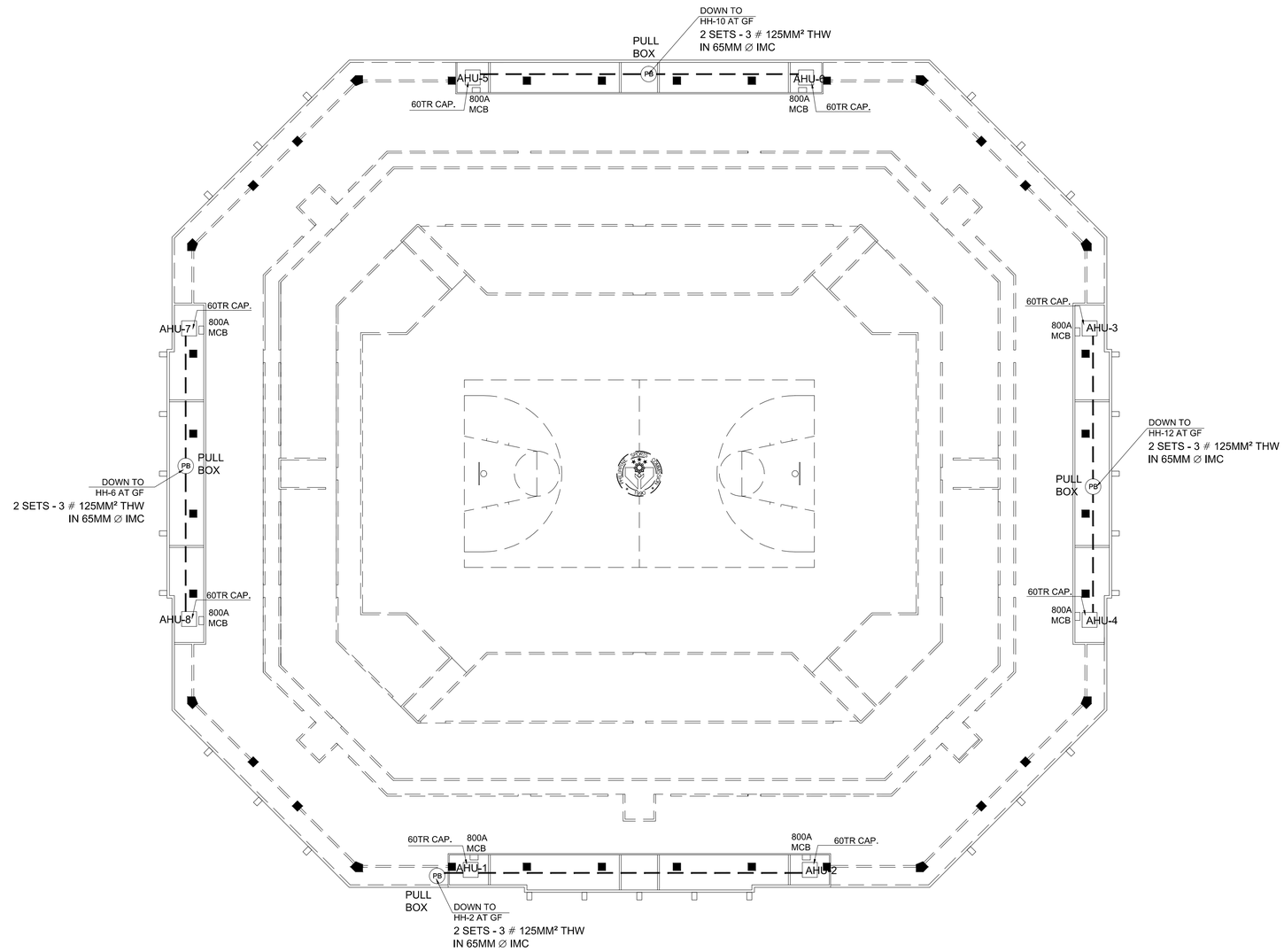


# UPPER FLOOR PLAN - A/C AIR HANDLING UNIT (AHU) FEEDER LAYOUT

SCALE 1:200

0 1 2 3 4 5 10 20 30

| OWNER : | PROJECT : | DESIGN BY: | SUBMITTED BY: | RECOMMENDING APPROVAL: | APPROVED BY : | SHEET CONTENT : | SHEET NO : |
|---|---|---|---|---|---|---|---|
| **PHILIPPINE SPORTS COMMISSION**<br>RMSC, PABLO OCAMPO SR. ST, MALATE, MANILA | **NINOY AQUINO STADIUM REHABILITATION PROJECT** | DRAWN BY:<br>CHECK BY: | ENGR. PEDRO I. PINEDA JR.<br>HEAD - ENGINEERING UNIT | DIR. MERLITA R. IBAY<br>DEPUTY EXECUTIVE DIRECTOR | HON. WILLIAM I. RAMIREZ<br>CHAIRMAN | AS SHOWN | E<br>2 / 22 |
| | RMSC, PABLO OCAMPO SR. ST, MALATE, MANILA | DATE: | | | | | |

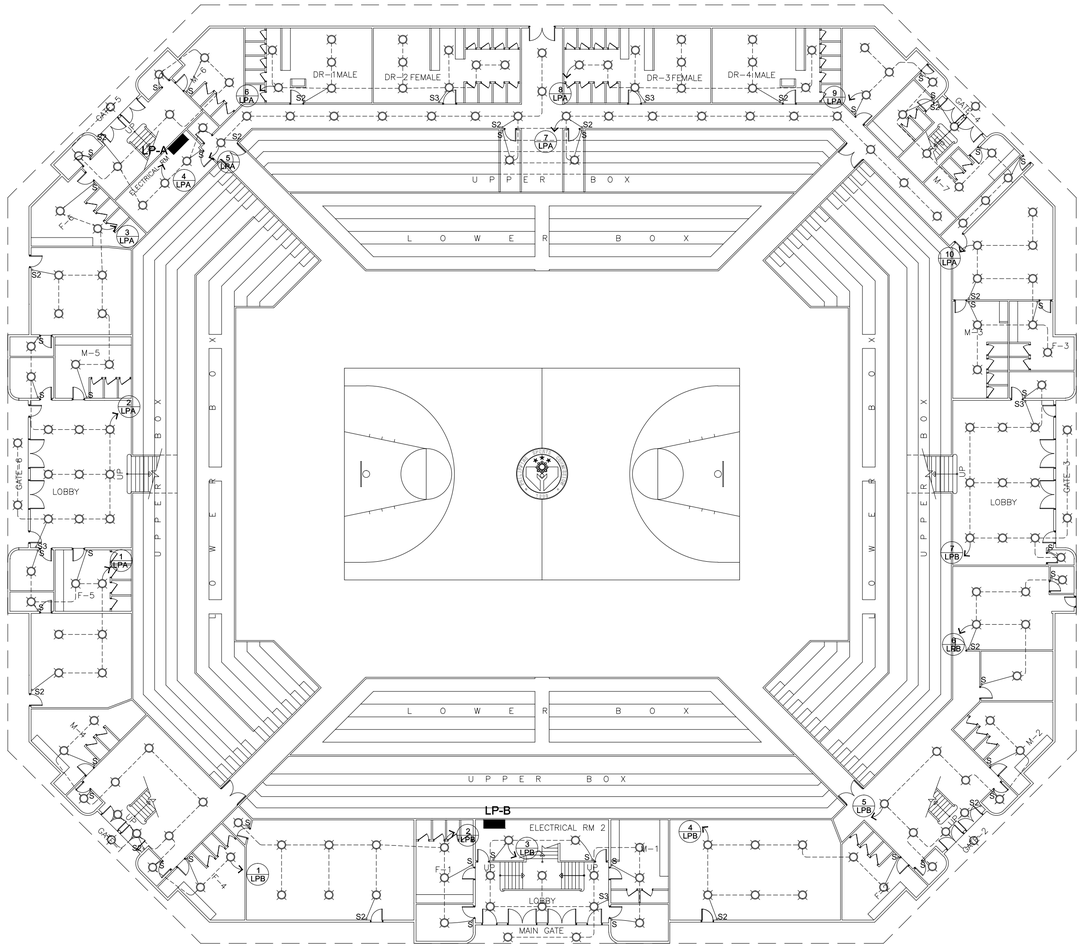


# GROUND FLOOR PLAN - CEILING LIGHTING LAYOUT

SCALE 1:200

0 1 2 3 4 5 10 20 30

| OWNER : | PROJECT : | DESIGN BY: | SUBMITTED BY: | RECOMMENDING APPROVAL: | APPROVED BY : | SHEET CONTENT : | SHEET NO : |
|---|---|---|---|---|---|---|---|
| **PHILIPPINE SPORTS COMMISSION**<br>RMSC, PABLO OCAMPO SR. ST, MALATE, MANILA | **NINOY AQUINO STADIUM REHABILITATION PROJECT** | DRAWN BY: | ENGR. PEDRO I. PINEDA JR.<br>HEAD - ENGINEERING UNIT | DIR. MERLITA R. IBAY<br>DEPUTY EXECUTIVE DIRECTOR | HON. WILLIAM I. RAMIREZ<br>CHAIRMAN | AS SHOWN | E<br>3 22 |
| | | CHECK BY: | | | | | |
| | RMSC, PABLO OCAMPO SR. ST, MALATE, MANILA | DATE: | | | | | |

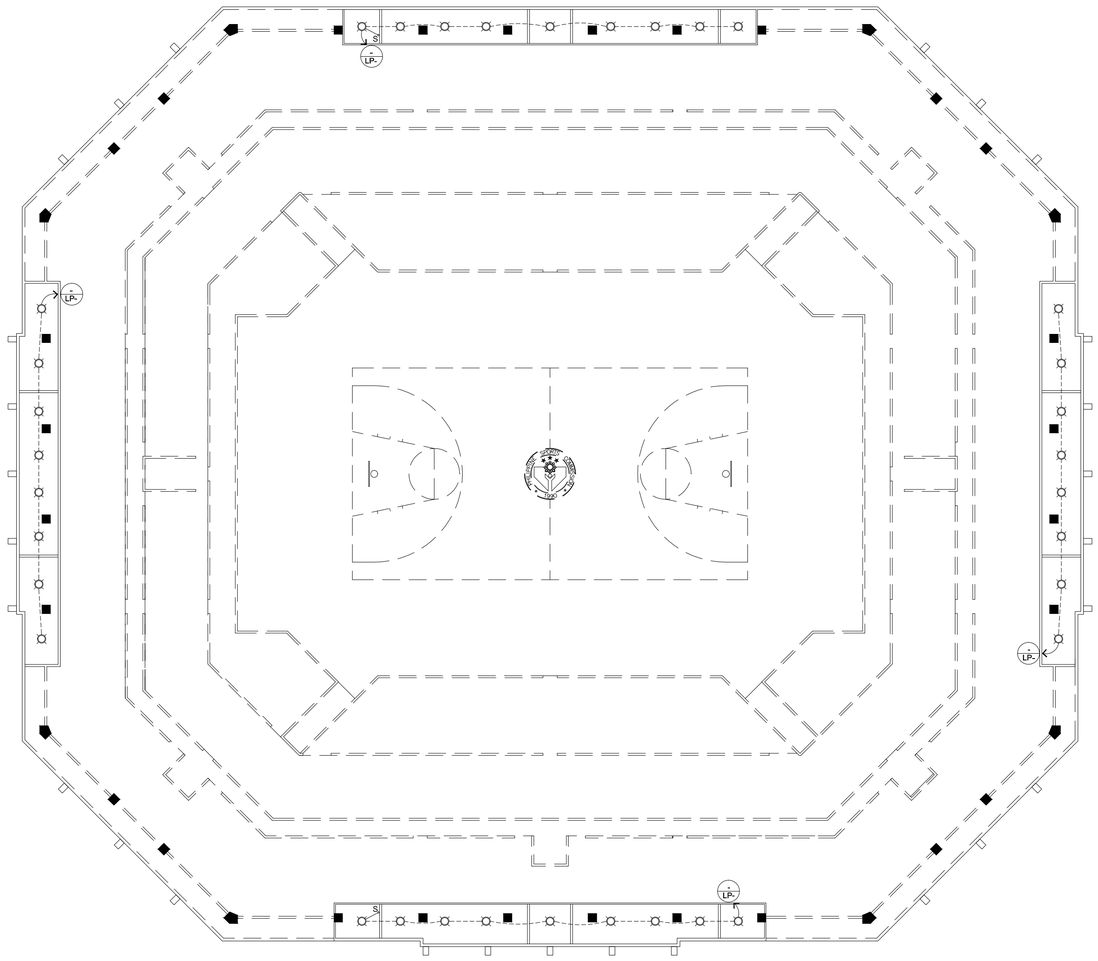


# UPPER FLOOR PLAN - CEILING LIGHTING LAYOUT

SCALE 1:200

0 1 2 3 4 5 10 20 30

| OWNER : | PROJECT : | DESIGN BY: | SUBMITTED BY: | RECOMMENDING APPROVAL: | APPROVED BY : | SHEET CONTENT : | SHEET NO : |
|---|---|---|---|---|---|---|---|
| **PHILIPPINE SPORTS COMMISSION**<br>RMSC, PABLO OCAMPO SR. ST, MALATE, MANILA | **NINOY AQUINO STADIUM REHABILITATION PROJECT** | DRAWN BY: | ENGR. PEDRO I. PINEDA JR.<br>HEAD - ENGINEERING UNIT | DIR. MERLITA R. IBAY<br>DEPUTY EXECUTIVE DIRECTOR | HON. WILLIAM I. RAMIREZ<br>CHAIRMAN | AS SHOWN | E<br>4 22 |
| | | CHECK BY: | | | | | |
| | RMSC, PABLO OCAMPO SR. ST, MALATE, MANILA | DATE: | | | | | |

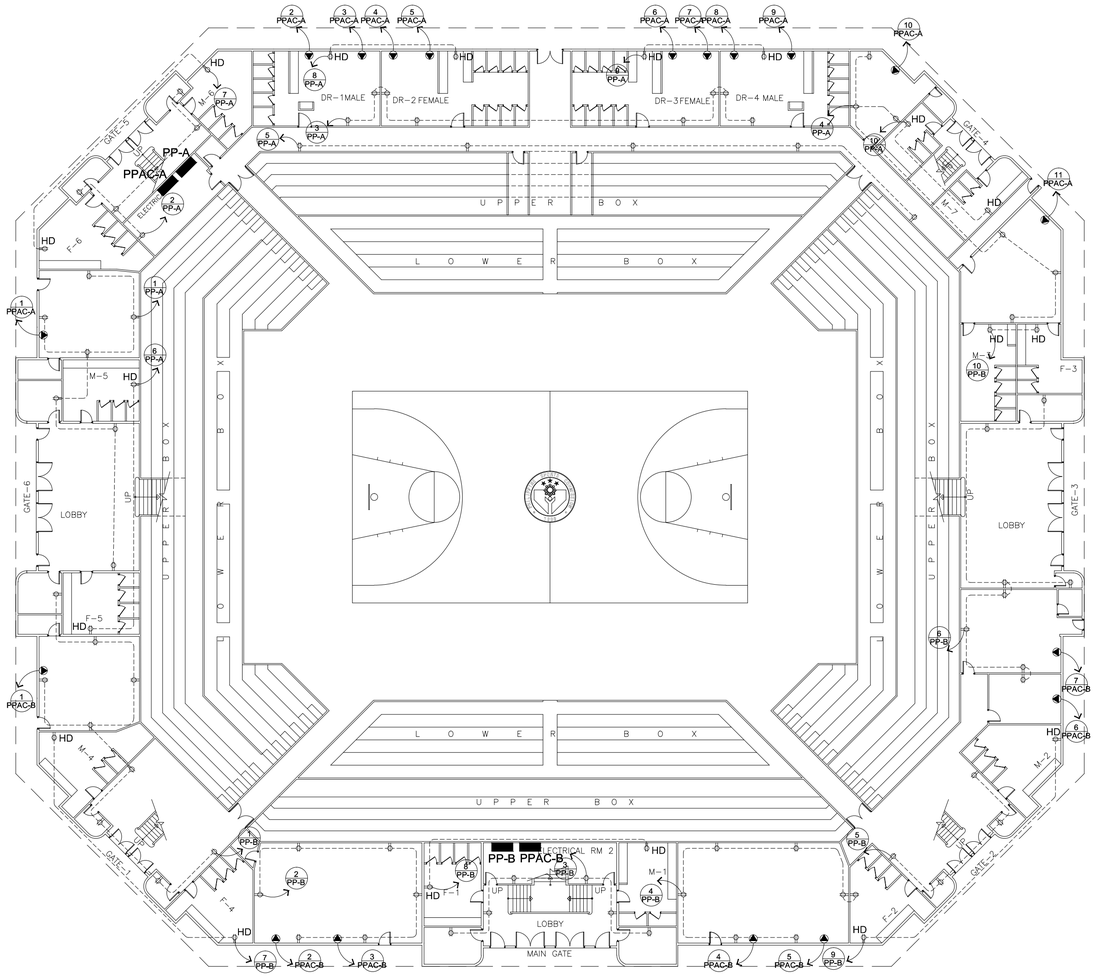


# GROUND FLOOR PLAN - POWER LAYOUT

SCALE 1:200

0 1 2 3 4 5 10 20 30

| OWNER : | PROJECT : | DESIGN BY: | SUBMITTED BY: | RECOMMENDING APPROVAL: | APPROVED BY : | SHEET CONTENT : | SHEET NO : |
|---|---|---|---|---|---|---|---|
| **PHILIPPINE SPORTS COMMISSION**<br>RMSC, PABLO OCAMPO SR. ST, MALATE, MANILA | **NINOY AQUINO STADIUM REHABILITATION PROJECT** | DRAWN BY: | ENGR. PEDRO I. PINEDA JR.<br>HEAD - ENGINEERING UNIT | DIR. MERLITA R. IBAY<br>DEPUTY EXECUTIVE DIRECTOR | HON. WILLIAM I. RAMIREZ<br>CHAIRMAN | AS SHOWN | E<br>5 22 |
| | | CHECK BY: | | | | | |
| | RMSC, PABLO OCAMPO SR. ST, MALATE, MANILA | DATE: | | | | | |

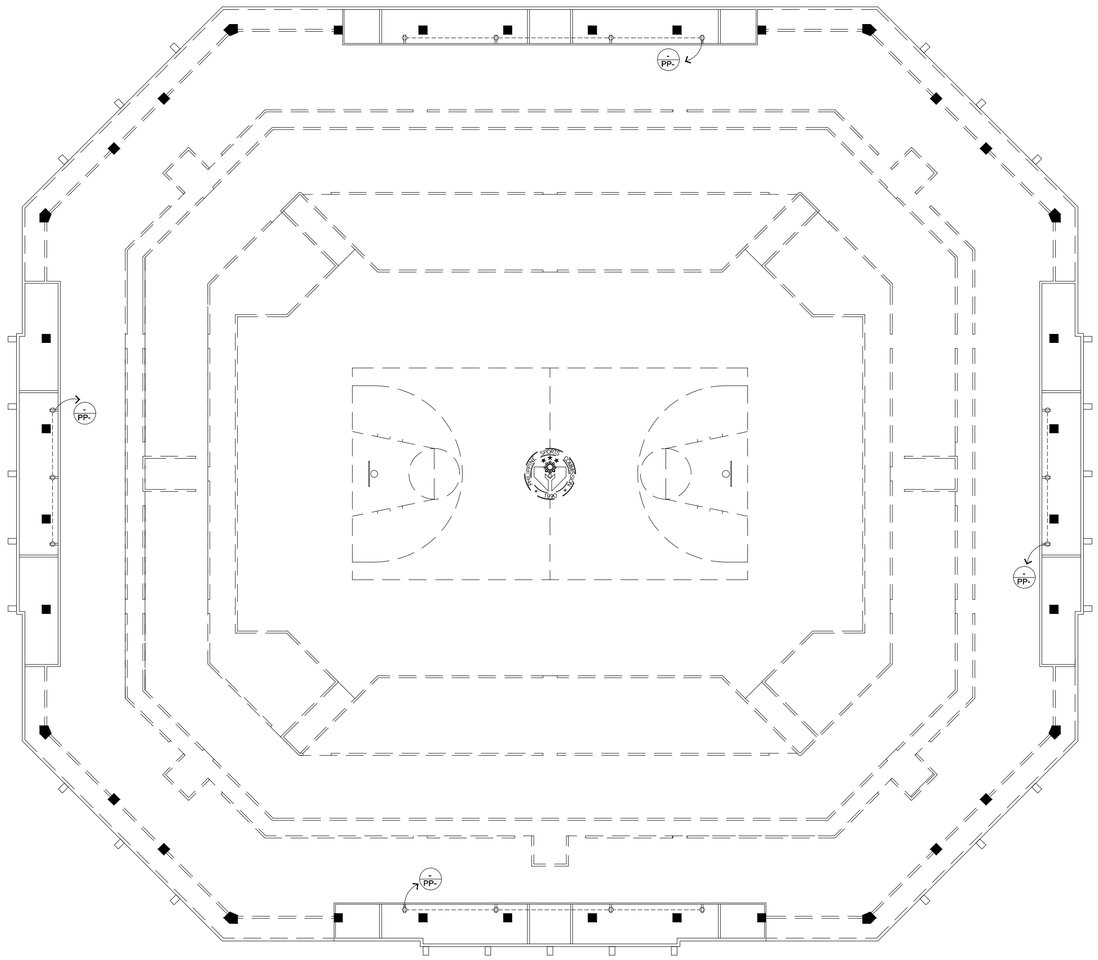


# UPPER FLOOR PLAN - POWER LAYOUT

SCALE 1:200

0 1 2 3 4 5 10 20 30

| OWNER : | PROJECT : | DESIGN BY: | SUBMITTED BY: | RECOMMENDING APPROVAL: | APPROVED BY : | SHEET CONTENT : | SHEET NO : |
|---|---|---|---|---|---|---|---|
| **PHILIPPINE SPORTS COMMISSION**<br>RMSC, PABLO OCAMPO SR. ST, MALATE, MANILA | **NINOY AQUINO STADIUM REHABILITATION PROJECT** | DRAWN BY:<br>CHECK BY: | ENGR. PEDRO I. PINEDA JR.<br>HEAD - ENGINEERING UNIT | DIR. MERLITA R. IBAY<br>DEPUTY EXECUTIVE DIRECTOR | HON. WILLIAM I. RAMIREZ<br>CHAIRMAN | AS SHOWN | E<br>6 / 22 |
| | RMSC, PABLO OCAMPO SR. ST, MALATE, MANILA | DATE: | | | | | |

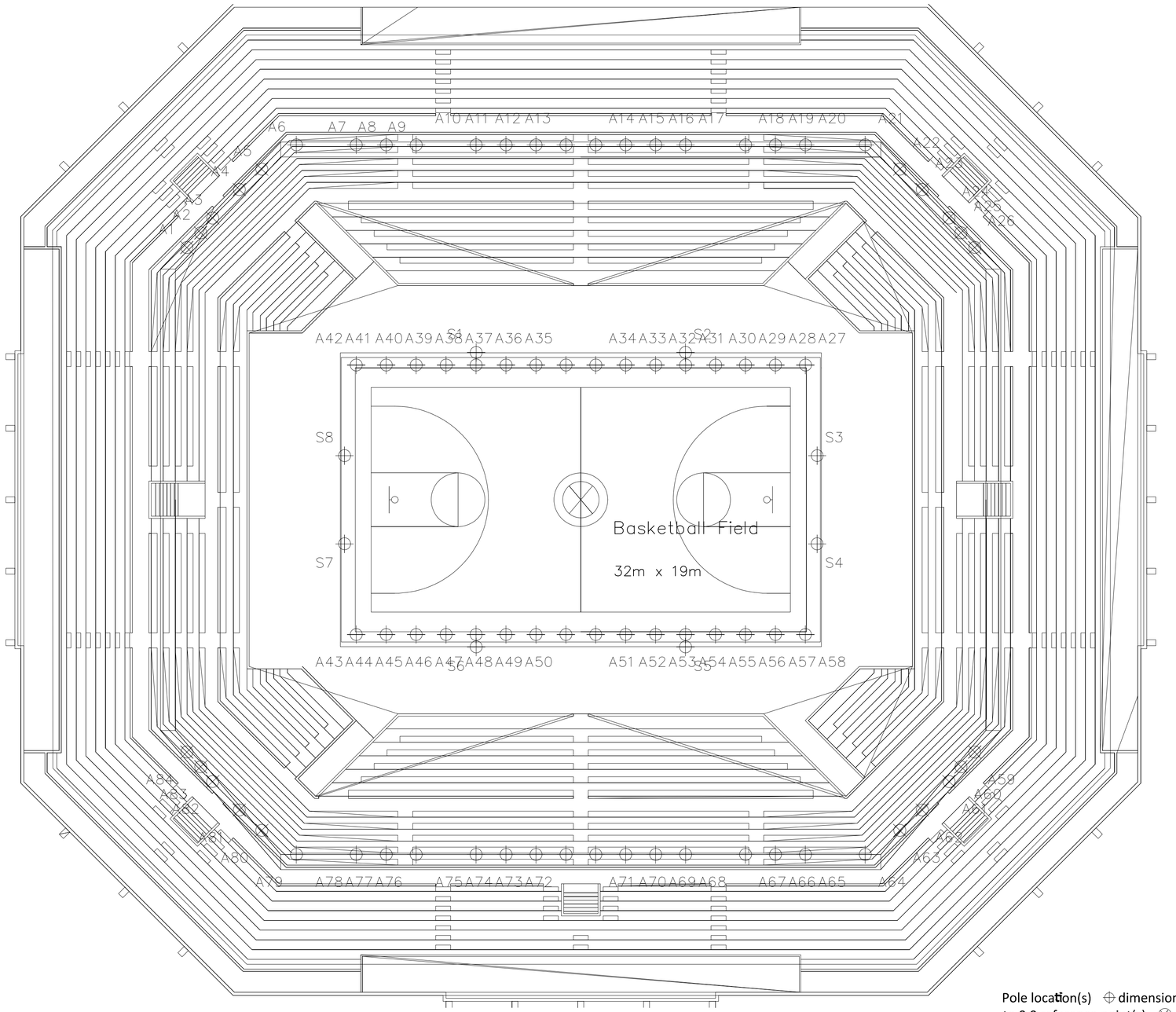


SCALE 1: 400

0 10m 20m

## EQUIPMENT LAYOUT

**INCLUDES:**

· Basketball Field

**Electrical System Requirements:** Refer to Amperage Draw Chart and/or the **"Control System Summary"** for electrical sizing.

**Installation Requirements:** Results assume ?3% nominal voltage at line side of the driver and structures located within 3 feet (1m) of design locations.

## EQUIPMENT LIST FOR AREAS SHOWN

| Pole | | | | Luminaires | | |
|---|---|---|---|---|---|---|
| QTY | LOCATION | SIZE | GRADE ELEVATION | MOUNTING HEIGHT | LUMINAIRE TYPE | QTY / POLE |
| 52 | A1-A26<br>A59-A84 | | 11m | 11m | TLC-LED-400 | 1 |
| 32 | A27-A30<br>A33-A36<br>A39-A46<br>A49-A52<br>A55-A58<br>S1-S8 | | 13.5m | 13.5m | TLC-LED-400 | 1 |
| 8 | A31-A32<br>A37-A38<br>A47-A48<br>A53-A54 | | 13.5m | 13.5m | TLC-LED-400 | 2 |
| 92 | TOTALS | | | | | 100 |

## SINGLE LUMINAIRE AMPERAGE DRAW CHART

| Ballast Specifications (.90 min power factor) | Line Amperage Per Luminaire (max draw) | | | | | | |
|---|---|---|---|---|---|---|---|
| Single Phase Voltage | 208 (60) | 220 (60) | 240 (60) | 277 (60) | 347 (60) | 380 (60) | 480 (60) |
| Other | - | - | - | - | - | - | - |

Pole location(s) ⊕ dimensions are relative to 0,0 reference point(s) ⊗

# EQUIPMENT LAYOUT

| OWNER : | PROJECT : | DESIGN BY: | SUBMITTED BY: | RECOMMENDING APPROVAL: | APPROVED BY : | SHEET CONTENT : | SHEET NO : |
|---|---|---|---|---|---|---|---|
| **PHILIPPINE SPORTS COMMISSION**<br>RMSC, PABLO OCAMPO SR. ST, MALATE, MANILA | **NINOY AQUINO STADIUM REHABILITATION PROJECT**<br>RMSC, PABLO OCAMPO SR. ST, MALATE, MANILA | DRAWN BY:<br>CHECK BY:<br>DATE: | ENGR. PEDRO I. PINEDA JR.<br>HEAD - ENGINEERING UNIT | DIR. MERLITA R. IBAY<br>DEPUTY EXECUTIVE DIRECTOR | HON. WILLIAM I. RAMIREZ<br>CHAIRMAN | AS SHOWN | E<br>7 22 |

## EQUIPMENT LIST FOR AREAS SHOWN

| Pole | | | | Luminaires | | | | |
|---|---|---|---|---|---|---|---|---|
| QTY | LOCATION | SIZE | GRADE ELEVATION | MOUNTING HEIGHT | LUMINAIRE TYPE | QTY / POLE | THIS GRID | OTHER GRIDS |
| 8 | S1-S8 | | 13.5m | 13.5m | TLC-LED-400 | 1 | 1 | 0 |
| 8 | TOTALS | | | | | 8 | 8 | 0 |

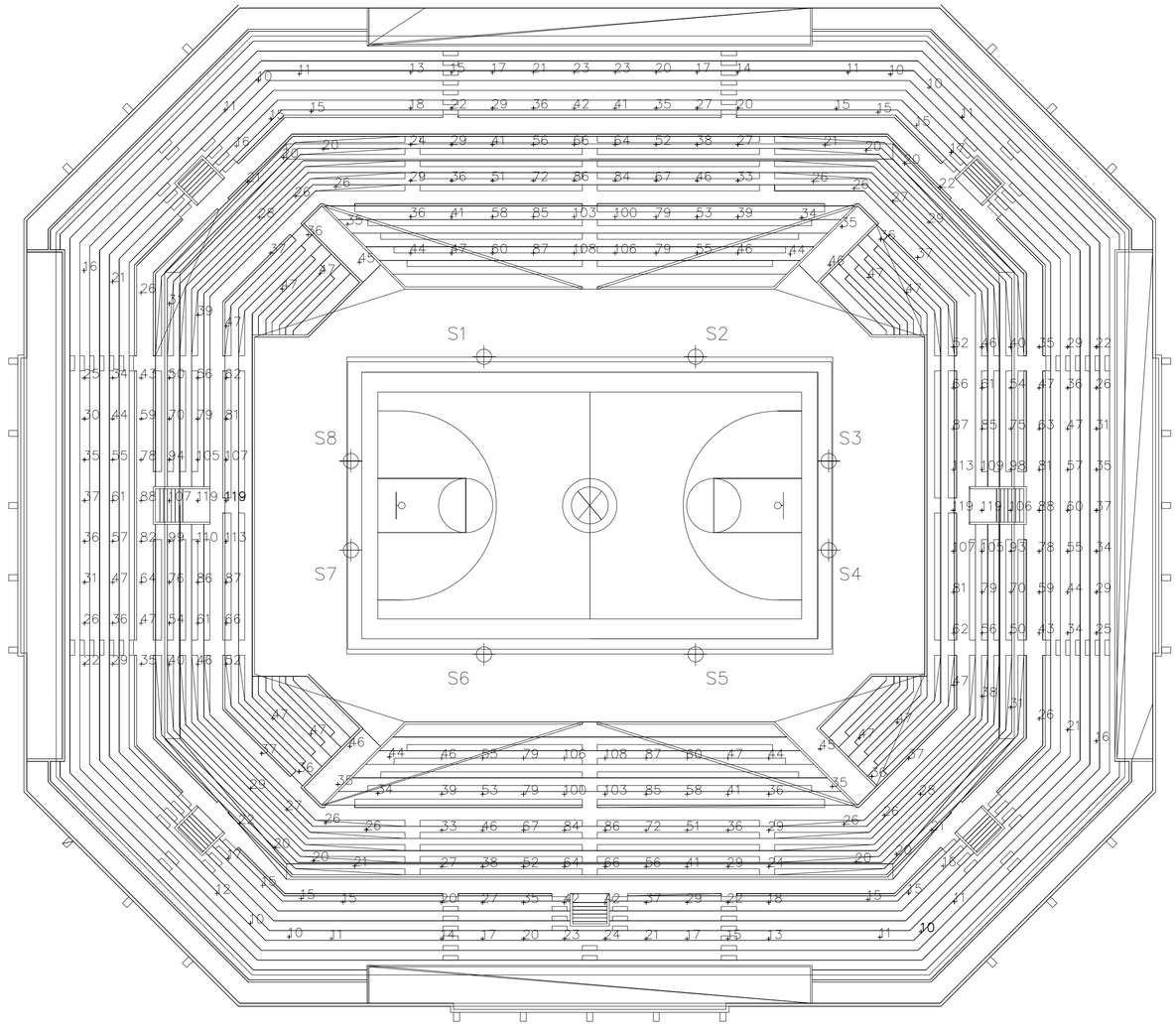


## GRID SUMMARY

**Name:** **03 Auditorium**
Size: 32m x 19m
Spacing: 3.1m x 3.1m
Height: 1.7m above grade

## ILLUMINATION SUMMARY

MAINTAINED HORIZONTAL LUX

| | Entire Grid |
|---|---|
| **Scan Average:** | **45.75** |
| Maximum: | 119 |
| Minimum: | 10 |
| Min / Avg: | 0.22 |
| **Min / Max:** | **0.08** |
| UG (adjacent pts): | 0.00 |
| CU: | 0.50 |
| No. of Points: | 300 |

LUMINAIRE INFORMATION

Color / CRI: 5700K - 90 CRI
Luminaire Output: 35,340 lumens
**No. of Luminaires:** **8**
Total Load: 3.2 kW

Lumen Maintenance

| Luminaire Type | L90 hrs | L80 hrs | L70 hrs |
|---|---|---|---|
| TLC-LED-400 | >81,000 | >81,000 | >81,000 |

Reported per TM-21-11. See luminaire datasheet for details.

**Guaranteed Performance:** The ILLUMINATION described above is guaranteed per your --- Warranty document and includes a 0.95 dirt depreciation factor.

**Field Measurements:** Individual field measurements may vary from computer-calculated predictions and should be taken in accordance with IESNA RP-6-15.

**Electrical System Requirements:**Refer to Amperage Draw Chart and/or the**"Control System Summary"** for electrical sizing.

**Installation Requirements:**Results assume ?3% nominal voltage at line side of the driver and structures located within 3 feet (1m) of design locations.

SCALE 1: 500

0 20m 40m

Pole location(s) ⊕ dimensions are relative to 0,0 reference point(s) ⊗

# ILLUMINATION SUMMARY

| OWNER : | PROJECT : | DESIGN BY: | SUBMITTED BY: | RECOMMENDING APPROVAL: | APPROVED BY : | SHEET CONTENT : | SHEET NO : |
|---|---|---|---|---|---|---|---|
| **PHILIPPINE SPORTS COMMISSION** RMSC, PABLO OCAMPO SR. ST, MALATE, MANILA | **NINOY AQUINO STADIUM REHABILITATION PROJECT** | DRAWN BY: | ENGR. PEDRO I. PINEDA JR. HEAD - ENGINEERING UNIT | DIR. MERLITA R. IBAY DEPUTY EXECUTIVE DIRECTOR | HON. WILLIAM I. RAMIREZ CHAIRMAN | AS SHOWN | E |
| | | CHECK BY: | | | | | 8 22 |
| | RMSC, PABLO OCAMPO SR. ST, MALATE, MANILA | DATE: | | | | | |

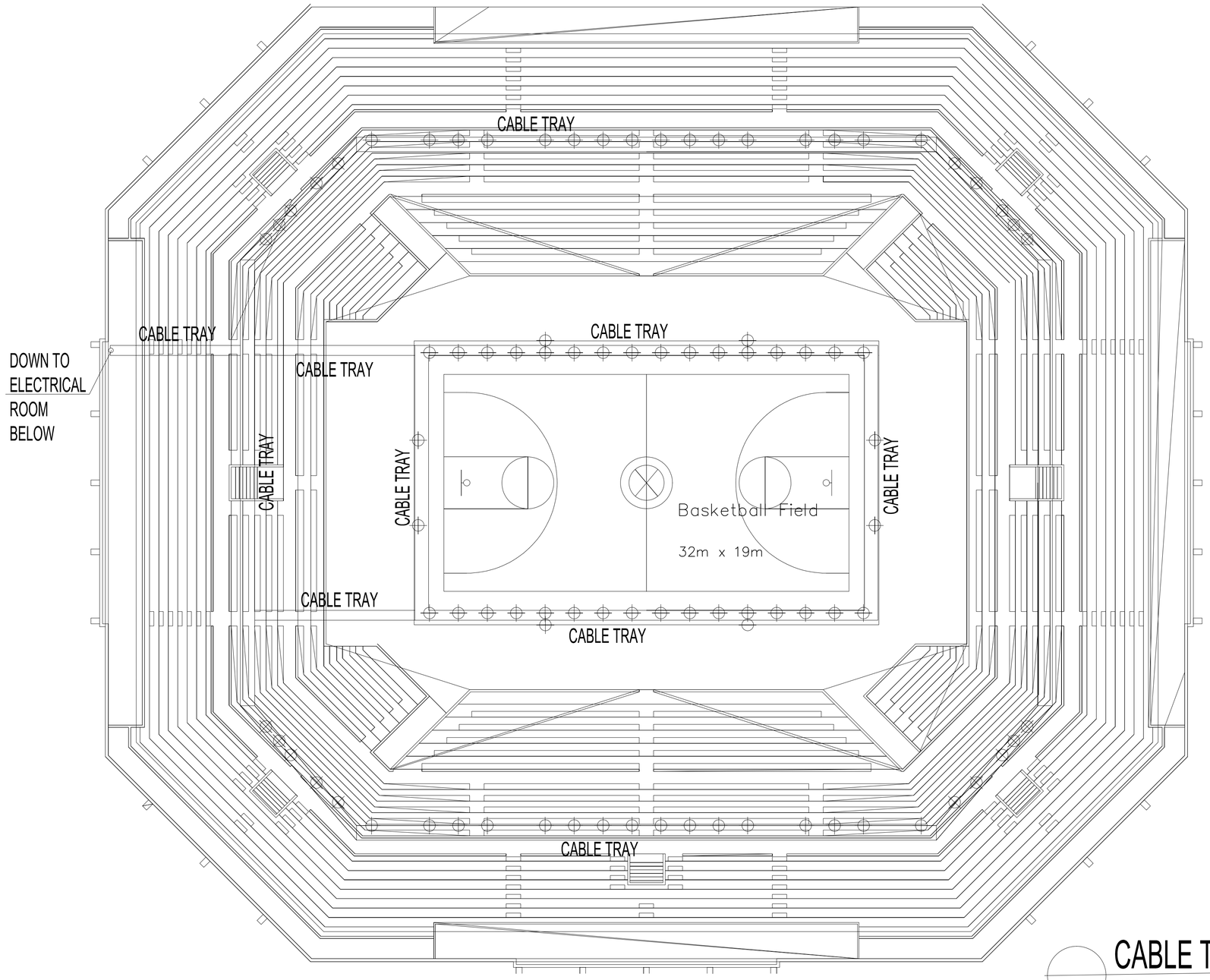


SCALE 1: 400

0 10m 20m

# CABLE TRAY LAYOUT

NOT TO SCALE

| OWNER : | PROJECT : | DESIGN BY: | SUBMITTED BY: | RECOMMENDING APPROVAL: | APPROVED BY : | SHEET CONTENT : | SHEET NO : |
|---|---|---|---|---|---|---|---|
| **PHILIPPINE SPORTS COMMISSION**<br>RMSC, PABLO OCAMPO SR. ST, MALATE, MANILA | **NINOY AQUINO STADIUM REHABILITATION PROJECT** | DRAWN BY: | ENGR. PEDRO I. PINEDA JR.<br>HEAD - ENGINEERING UNIT | DIR. MERLITA R. IBAY<br>DEPUTY EXECUTIVE DIRECTOR | HON. WILLIAM I. RAMIREZ<br>CHAIRMAN | AS SHOWN | E<br>9 / 22 |
| | RMSC, PABLO OCAMPO SR. ST, MALATE, MANILA | CHECK BY:<br>DATE: | | | | | |

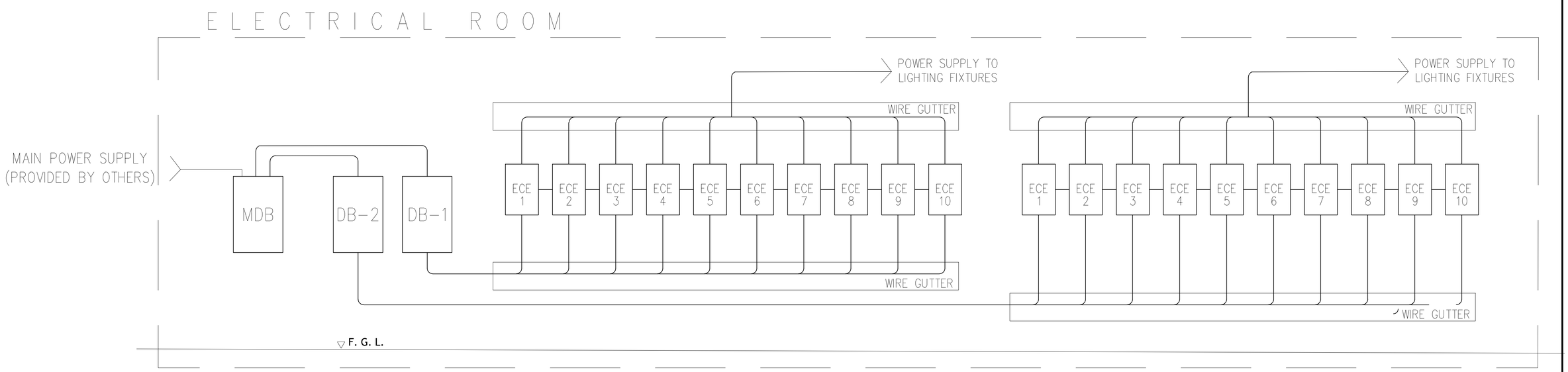


NOTE : FOR SIZES OF CABLES, WIRES AND CONDUITS, SEE ELECTRICAL LOAD SCHEDULE AND DETAILS

## POWER SINGLE LINE DIAGRAM

NOT TO SCALE

| OWNER : | PROJECT : | DESIGN BY: | SUBMITTED BY: | RECOMMENDING APPROVAL: | APPROVED BY : | SHEET CONTENT : | SHEET NO : |
|---|---|---|---|---|---|---|---|
| **PHILIPPINE SPORTS COMMISSION**<br>RMSC, PABLO OCAMPO SR. ST, MALATE, MANILA | **NINOY AQUINO STADIUM REHABILITATION PROJECT** | DRAWN BY:<br>CHECK BY: | ENGR. PEDRO I. PINEDA JR.<br>HEAD - ENGINEERING UNIT | DIR. MERLITA R. IBAY<br>DEPUTY EXECUTIVE DIRECTOR | HON. WILLIAM I. RAMIREZ<br>CHAIRMAN | AS SHOWN | E<br>10 / 22 |
| | RMSC, PABLO OCAMPO SR. ST, MALATE, MANILA | DATE: | | | | | |

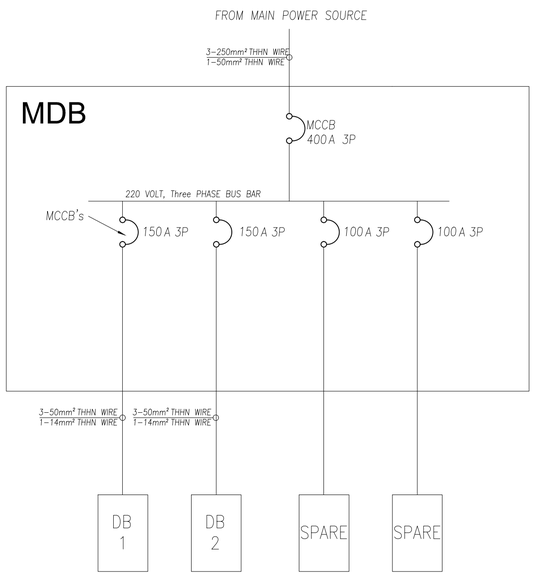


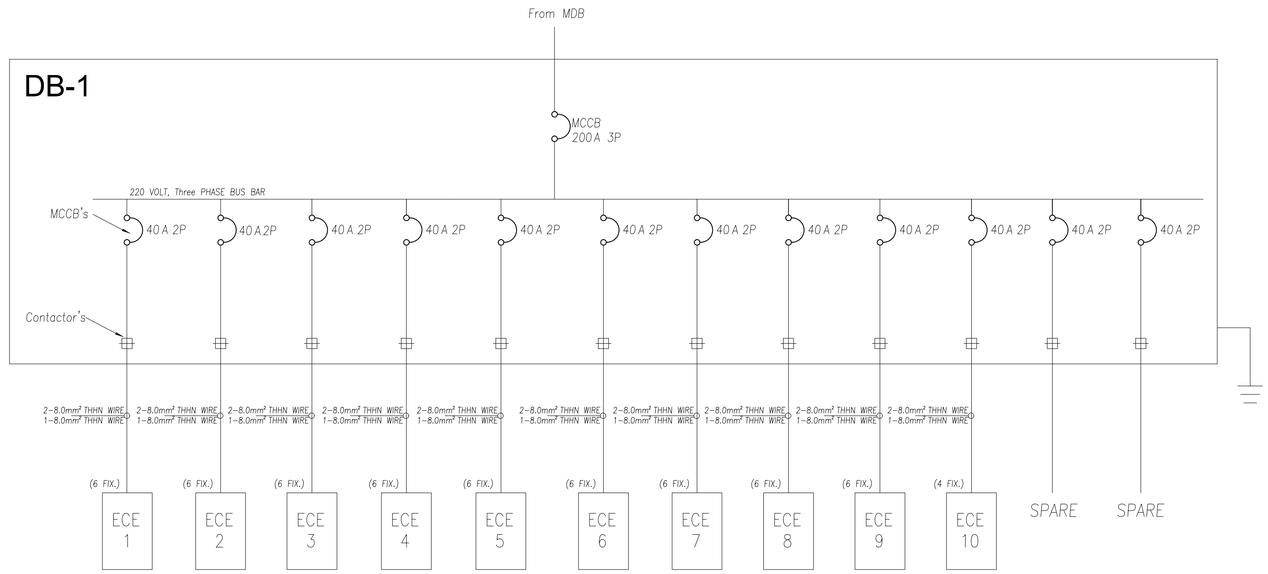


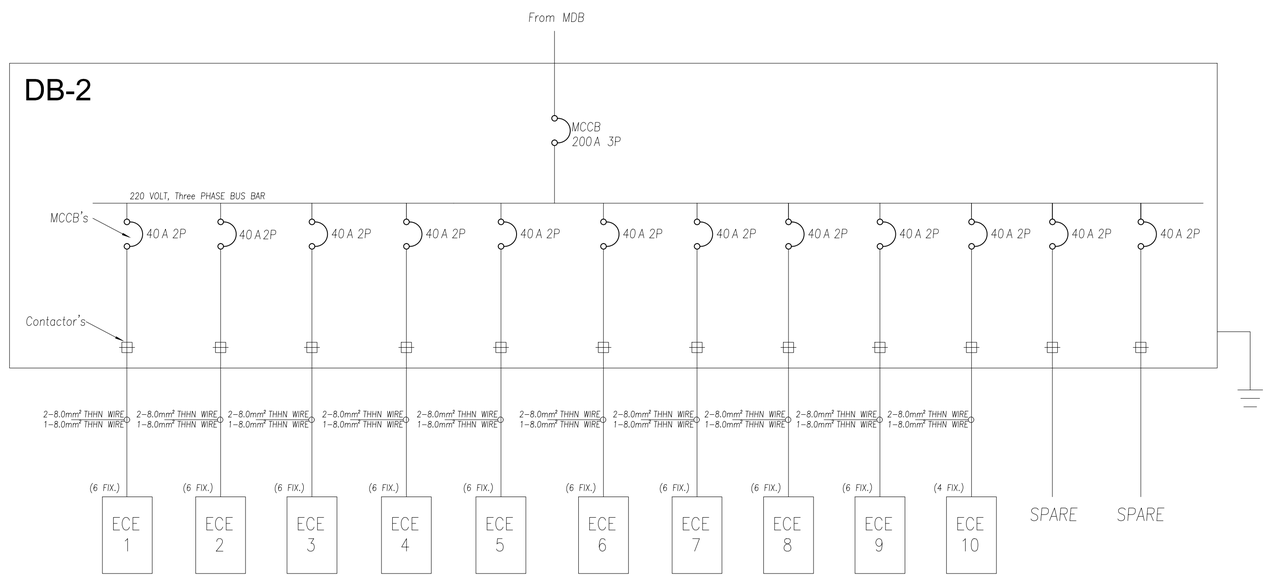


# DISTRIBUTION BOARD DETAIL (MDB & DB PANEL)

NOT TO SCALE

| OWNER : | PROJECT : | DESIGN BY: | SUBMITTED BY: | RECOMMENDING APPROVAL: | APPROVED BY : | SHEET CONTENT : | SHEET NO : |
|---|---|---|---|---|---|---|---|
| **PHILIPPINE SPORTS COMMISSION**<br>RMSC, PABLO OCAMPO SR. ST, MALATE, MANILA | **NINOY AQUINO STADIUM REHABILITATION PROJECT** | DRAWN BY: | ENGR. PEDRO I. PINEDA JR.<br>HEAD - ENGINEERING UNIT | DIR. MERLITA R. IBAY<br>DEPUTY EXECUTIVE DIRECTOR | HON. WILLIAM I. RAMIREZ<br>CHAIRMAN | AS SHOWN | E<br>11 22 |
| | RMSC, PABLO OCAMPO SR. ST, MALATE, MANILA | CHECK BY:<br>DATE: | | | | | |

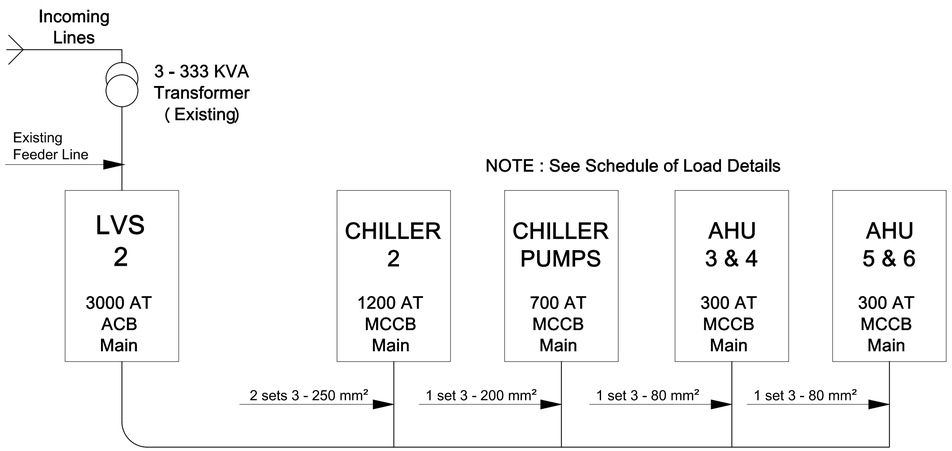


## LVS 2 - POWER SINGLE LINE DIAGRAM

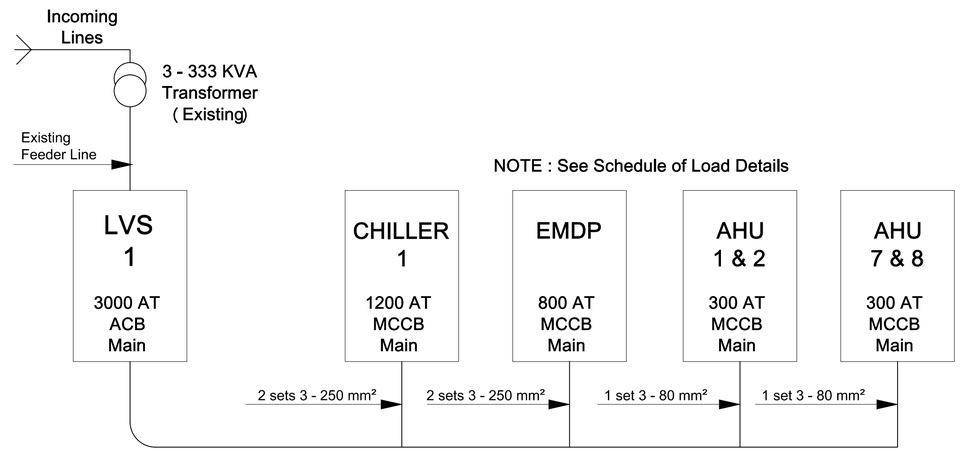


## LVS 1 - POWER SINGLE LINE DIAGRAM

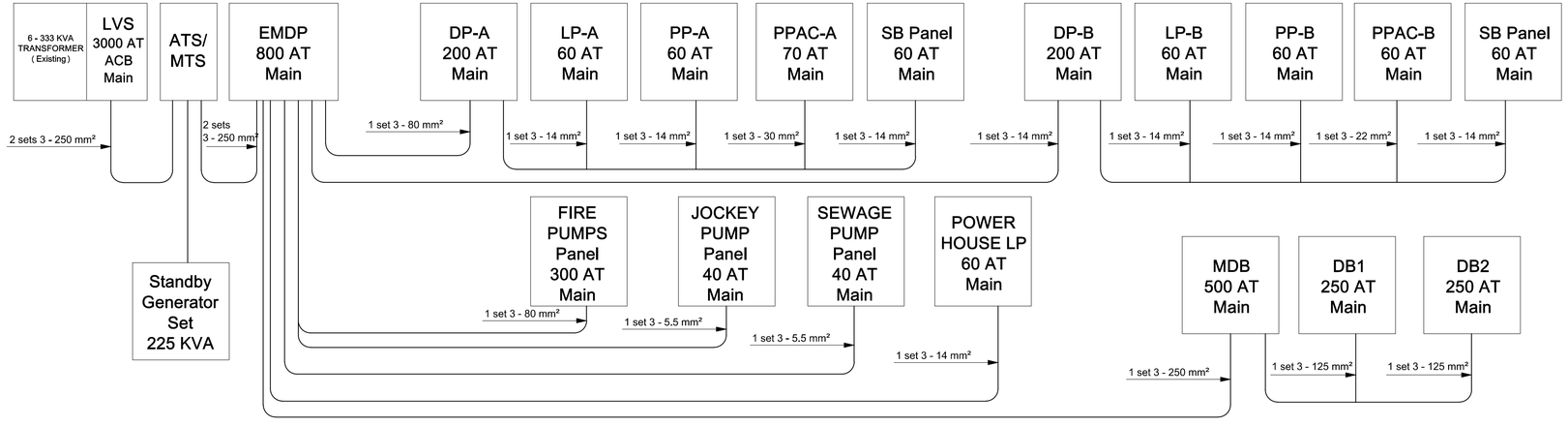


NOTE : See Schedule of Load Details

## EMDP - EMERGENCY MAIN DISTRIBUTION PANEL - POWER SINGLE LINE DIAGRAM

| OWNER : | PROJECT : | DESIGN BY: | SUBMITTED BY: | RECOMMENDING APPROVAL: | APPROVED BY : | SHEET CONTENT : | SHEET NO : |
|---|---|---|---|---|---|---|---|
| **PHILIPPINE SPORTS COMMISSION**<br>RMSC, PABLO OCAMPO SR. ST, MALATE, MANILA | **NINOY AQUINO STADIUM REHABILITATION PROJECT** | DRAWN BY: | ENGR. PEDRO I. PINEDA JR.<br>HEAD - ENGINEERING UNIT | DIR. MERLITA R. IBAY<br>DEPUTY EXECUTIVE DIRECTOR | HON. WILLIAM I. RAMIREZ<br>CHAIRMAN | AS SHOWN | E |
| | | CHECK BY: | | | | | 12 22 |
| | RMSC, PABLO OCAMPO SR. ST, MALATE, MANILA | DATE: | | | | | |

## SCHEDULE OF LOADS

### MDB

| CKT NO. | LOAD DESCRIPTION | Total Ampere | Voltage | Phase Connection (Amperes) | | | Circuit Breaker | | Wire | | Conduit |
|---|---|---|---|---|---|---|---|---|---|---|---|
| | | | V | AB | BC | CA | AT | P | MM² | MM² | INCHES |
| 1 | DB-1 | 2.20 | 220 | 48.40 | 52.80 | 52.80 | 150 | 3 | 3-8.0 | 14.0 | 1 1/2" |
| 2 | DB-2 | 2.20 | 220 | 48.40 | 52.80 | 52.80 | 150 | 3 | 3-8.0 | 14.0 | 1 1/2" |
| 3 | SPARE | - | - | 25.00 | 25.00 | 25.00 | 100 | 3 | - | - | - |
| 4 | SPARE | - | - | 25.00 | 25.00 | 25.00 | 100 | 3 | - | - | - |
| | TOTAL CONNECTED LOADS | | | 146.80 | 155.60 | 155.60 | | | | | |
| I = 155.60 x 1.732 @ 100% DEMAND FACTOR<br>I = 269.50 Amp | | | | USE:<br>3 – 250mm² THHN WIRE + 1–50MM²<br>IN 3 1/2" ø IMC CONDUIT | | | | | CIRCUIT BREAKER:<br>400 AT 3P, 250V<br>WITH GROUND | | |

## SCHEDULE OF LOADS

### DB–1

| CKT NO. | LOAD DESCRIPTION | Total Ampere | Voltage | Phase Connection (Amperes) | | | Circuit Breaker | | Wire | | Conduit |
|---|---|---|---|---|---|---|---|---|---|---|---|
| | | | V | AB | BC | CA | AT | P | MM² | MM² | INCHES |
| 1 | 6 LIGHTS (TLC–LED–400) | 2.20 | 220 | 13.20 | | | 40 | 2 | 2-8.0 | 8.0 | 3/4" |
| 2 | 6 LIGHTS (TLC–LED–400) | 2.20 | 220 | | 13.20 | | 40 | 2 | 2-8.0 | 8.0 | 3/4" |
| 3 | 6 LIGHTS (TLC–LED–400) | 2.20 | 220 | | | 13.20 | 40 | 2 | 2-8.0 | 8.0 | 3/4" |
| 4 | 6 LIGHTS (TLC–LED–400) | 2.20 | 220 | 13.20 | | | 40 | 2 | 2-8.0 | 8.0 | 3/4" |
| 5 | 6 LIGHTS (TLC–LED–400) | 2.20 | 220 | | 13.20 | | 40 | 2 | 2-8.0 | 8.0 | 3/4" |
| 6 | 6 LIGHTS (TLC–LED–400) | 2.20 | 220 | | | 13.20 | 40 | 2 | 2-8.0 | 8.0 | 3/4" |
| 7 | 6 LIGHTS (TLC–LED–400) | 2.20 | 220 | 13.20 | | | 40 | 2 | 2-8.0 | 8.0 | 3/4" |
| 8 | 6 LIGHTS (TLC–LED–400) | 2.20 | 220 | | 13.20 | | 40 | 2 | 2-8.0 | 8.0 | 3/4" |
| 9 | 6 LIGHTS (TLC–LED–400) | 2.20 | 220 | | | 13.20 | 40 | 2 | 2-8.0 | 8.0 | 3/4" |
| 10 | 4 LIGHTS (TLC–LED–400) | 2.20 | 220 | 8.80 | | | 40 | 2 | 2-8.0 | 8.0 | 3/4" |
| 11 | SPARE | - | - | | 13.20 | | 40 | 2 | - | - | - |
| 12 | SPARE | - | - | | | 13.20 | 40 | 2 | - | - | - |
| | TOTAL CONNECTED LOADS | | | 48.40 | 52.80 | 52.80 | | | | | |
| I = 52.80 x 1.732 @ 100% DEMAND FACTOR<br>I = 91.50 Amp | | | | USE:<br>3 – 50mm² THHN WIRE + 1–14MM²<br>IN 1 1/2" ø IMC CONDUIT | | | | | CIRCUIT BREAKER:<br>150 AT 3P, 250V<br>WITH GROUND | | |

## SCHEDULE OF LOADS

### DB–2

| CKT NO. | LOAD DESCRIPTION | Total Ampere | Voltage | Phase Connection (Amperes) | | | Circuit Breaker | | Wire | | Conduit |
|---|---|---|---|---|---|---|---|---|---|---|---|
| | | | V | AB | BC | CA | AT | P | MM² | MM² | INCHES |
| 1 | 6 LIGHTS (TLC–LED–400) | 2.20 | 220 | 13.20 | | | 40 | 2 | 2-8.0 | 8.0 | 3/4" |
| 2 | 6 LIGHTS (TLC–LED–400) | 2.20 | 220 | | 13.20 | | 40 | 2 | 2-8.0 | 8.0 | 3/4" |
| 3 | 6 LIGHTS (TLC–LED–400) | 2.20 | 220 | | | 13.20 | 40 | 2 | 2-8.0 | 8.0 | 3/4" |
| 4 | 6 LIGHTS (TLC–LED–400) | 2.20 | 220 | 13.20 | | | 40 | 2 | 2-8.0 | 8.0 | 3/4" |
| 5 | 6 LIGHTS (TLC–LED–400) | 2.20 | 220 | | 13.20 | | 40 | 2 | 2-8.0 | 8.0 | 3/4" |
| 6 | 6 LIGHTS (TLC–LED–400) | 2.20 | 220 | | | 13.20 | 40 | 2 | 2-8.0 | 8.0 | 3/4" |
| 7 | 6 LIGHTS (TLC–LED–400) | 2.20 | 220 | 13.20 | | | 40 | 2 | 2-8.0 | 8.0 | 3/4" |
| 8 | 6 LIGHTS (TLC–LED–400) | 2.20 | 220 | | 13.20 | | 40 | 2 | 2-8.0 | 8.0 | 3/4" |
| 9 | 6 LIGHTS (TLC–LED–400) | 2.20 | 220 | | | 13.20 | 40 | 2 | 2-8.0 | 8.0 | 3/4" |
| 10 | 4 LIGHTS (TLC–LED–400) | 2.20 | 220 | 8.80 | | | 40 | 2 | 2-8.0 | 8.0 | 3/4" |
| 11 | SPARE | - | - | | 13.20 | | 40 | 2 | - | - | - |
| 12 | SPARE | - | - | | | 13.20 | 40 | 2 | - | - | - |
| | TOTAL CONNECTED LOADS | | | 48.40 | 52.80 | 52.80 | | | | | |
| I = 52.80 x 1.732 @ 100% DEMAND FACTOR<br>I = 91.50 Amp | | | | USE:<br>3 – 50mm² THHN WIRE + 1–14MM²<br>IN 1 1/2" ø IMC CONDUIT | | | | | CIRCUIT BREAKER:<br>150 AT 3P, 250V<br>WITH GROUND | | |

# MDB & DB - DESIGN AND LOAD COMPUTATION

NOT TO SCALE

| OWNER : | PROJECT : | DESIGN BY: | SUBMITTED BY: | RECOMMENDING APPROVAL: | APPROVED BY : | SHEET CONTENT : | SHEET NO : |
|---|---|---|---|---|---|---|---|
| **PHILIPPINE SPORTS COMMISSION**<br>RMSC, PABLO OCAMPO SR. ST, MALATE, MANILA | **NINOY AQUINO STADIUM REHABILITATION PROJECT**<br>RMSC, PABLO OCAMPO SR. ST, MALATE, MANILA | DRAWN BY:<br>CHECK BY:<br>DATE: | ENGR. PEDRO I. PINEDA JR.<br>HEAD - ENGINEERING UNIT | DIR. MERLITA R. IBAY<br>DEPUTY EXECUTIVE DIRECTOR | HON. WILLIAM I. RAMIREZ<br>CHAIRMAN | AS SHOWN | E<br>13 22 |

## SCHEDULE OF LOADS

ECE PANEL: (TYPICAL: DB-1 TO DB-9)

| CKT NO. | LOAD DESCRIPTION (each fixture - LED) | Voltage | Total Ampere | Circuit Breaker | | Wire | | Conduit |
|---|---|---|---|---|---|---|---|---|
| | | V | | AT | P | MM² | MM² | INCHES |
| 1 | 1-Light (TLC-LED-400) | 220 | 2.20 | | 2 | 2-3.5 | 3.5 | CABLE TRAY |
| 2 | 1-Light (TLC-LED-400) | 220 | 2.20 | | 2 | 2-3.5 | 3.5 | |
| 3 | 1-Light (TLC-LED-400) | 220 | 2.20 | | 2 | 2-3.5 | 3.5 | |
| 4 | 1-Light (TLC-LED-400) | 220 | 2.20 | | 2 | 2-3.5 | 3.5 | |
| 5 | 1-Light (TLC-LED-400) | 220 | 2.20 | | 2 | 2-3.5 | 3.5 | |
| 6 | 1-Light (TLC-LED-400) | 220 | 2.20 | | 2 | 2-3.5 | 3.5 | |
| TOTAL CONNECTED LOADS | | | 13.20 | | | | | |

| | | |
|---|---|---|
| I = 13.20 @ 100% DEMAND FACTOR<br>I = 13.20 Amp | USE:<br>2 - 8.0mm² THHN<br>1 - 8.0mm² GROUND WIRE IN 1" IMC CONDUIT | CIRCUIT BREAKER:<br>40 AT 2P, 250V<br>WITH GROUND |

## SCHEDULE OF LOADS

ECE PANEL: (TYPICAL: DB-1 TO DB-9)

| CKT NO. | LOAD DESCRIPTION (each fixture - LED) | Voltage | Total Ampere | Circuit Breaker | | Wire | | Conduit |
|---|---|---|---|---|---|---|---|---|
| | | V | | AT | P | MM² | MM² | INCHES |
| 1 | 1-Light (TLC-LED-400) | 220 | 2.20 | | 2 | 2-3.5 | 3.5 | CABLE TRAY |
| 2 | 1-Light (TLC-LED-400) | 220 | 2.20 | | 2 | 2-3.5 | 3.5 | |
| 3 | 1-Light (TLC-LED-400) | 220 | 2.20 | | 2 | 2-3.5 | 3.5 | |
| 4 | 1-Light (TLC-LED-400) | 220 | 2.20 | | 2 | 2-3.5 | 3.5 | |
| TOTAL CONNECTED LOADS | | | 8.80 | | | | | |

| | | |
|---|---|---|
| I = 8.80 @ 100% DEMAND FACTOR<br>I = 8.80 Amp | USE:<br>2 - 8.0mm² THHN<br>1 - 8.0mm² GROUND WIRE IN 1" IMC CONDUIT | CIRCUIT BREAKER:<br>40 AT 2P, 250V<br>WITH GROUND |

# ECE DESIGN AND LOAD COMPUTATION

NOT TO SCALE

| OWNER : | PROJECT : | DESIGN BY: | SUBMITTED BY: | RECOMMENDING APPROVAL: | APPROVED BY : | SHEET CONTENT : | SHEET NO : |
|---|---|---|---|---|---|---|---|
| **PHILIPPINE SPORTS COMMISSION**<br>RMSC, PABLO OCAMPO SR. ST, MALATE, MANILA | **NINOY AQUINO STADIUM REHABILITATION PROJECT**<br>RMSC, PABLO OCAMPO SR. ST, MALATE, MANILA | DRAWN BY:<br>CHECK BY:<br>DATE: | ENGR. PEDRO I. PINEDA JR.<br>HEAD - ENGINEERING UNIT | DIR. MERLITA R. IBAY<br>DEPUTY EXECUTIVE DIRECTOR | HON. WILLIAM I. RAMIREZ<br>CHAIRMAN | AS SHOWN | E<br>14 22 |

## SCHEDULE OF LOADS

LP - A ( Lighting Panel ) — Mounting : Surface Mounted

| Ckt. No. | Load Description | No. of Lights | Watts | Total Watts | Phase Connection AB | Phase Connection BC | Phase Connection CA | Circuit Breaker AT | Circuit Breaker P | Wire MM² | Conduit MM |
|---|---|---|---|---|---|---|---|---|---|---|---|
| 1 | Lighting Outlet | 15 | 100 | 1500 | 6.52 | | | 20 | 2 | 2 - 3.5 | 15 |
| 2 | Lighting Outlet | 8 | 100 | 800 | 3.48 | | | 20 | 2 | 3.5 | 15 |
| 3 | Lighting Outlet | 11 | 100 | 1100 | | | 4.78 | 20 | 2 | 3.5 | 15 |
| 4 | Lighting Outlet | 10 | 100 | 1000 | | | 4.35 | 20 | 2 | 3.5 | 15 |
| 5 | Lighting Outlet | 12 | 100 | 1200 | | 5.22 | | 20 | 2 | 3.5 | 15 |
| 6 | Lighting Outlet | 10 | 100 | 1000 | | 4.35 | | 20 | 2 | 3.5 | 15 |
| 7 | Lighting Outlet | 12 | 100 | 1200 | 5.22 | | | 20 | 2 | 3.5 | 15 |
| 8 | Lighting Outlet | 9 | 100 | 900 | 3.91 | | | 20 | 2 | 3.5 | 15 |
| 9 | Lighting Outlet | 13 | 100 | 1300 | | | 5.65 | 20 | 2 | 3.5 | 15 |
| 10 | Spare | | | 1000 | | | 4.35 | 20 | 2 | | |
| 11 | Spare | | | 1000 | | 4.35 | | 20 | 2 | | |
| 12 | Spare | | | 1000 | | 4.35 | | 20 | 2 | | |
| Total Connected Load | | | | | 19.13 | 18.27 | 19.13 | | | | |

| Computations : | Use: | Use: | Circuit Breaker : |
|---|---|---|---|
| I = 19.13 x 1.73 @ 80% Demand Factor<br>= 26.48 Amperes | 3 - 14.0 mm² THHN<br>1 - 8.0 mm² Ground | 25 mm Ø | 60AT, 3P, 230 V<br>MCCB |

## SCHEDULE OF LOADS

PP - A ( Power Panel ) — Mounting : Surface Mounted

| Ckt. No. | Load Description | No. of Outlets | Watts | Total Watts | Phase Connection AB | Phase Connection BC | Phase Connection CA | Circuit Breaker AT | Circuit Breaker P | Wire MM² | Conduit MM |
|---|---|---|---|---|---|---|---|---|---|---|---|
| 1 | C.O. - Oulet | 8 | 360 | 2880 | 6.26 | | | 20 | 2 | 2 - 3.5 | 15 |
| 2 | C.O. - Oulet | 4 | 360 | 1440 | 3.13 | | | 20 | 2 | 2 - 3.5 | 15 |
| 3 | C.O. - Oulet | 8 | 360 | 2880 | | | 6.26 | 20 | 2 | 2 - 3.5 | 15 |
| 4 | C.O. - Oulet | 6 | 360 | 2160 | | | 4.70 | 20 | 2 | 2 - 3.5 | 15 |
| 5 | C.O. - Oulet | 5 | 360 | 1800 | | 3.92 | | 20 | 2 | 2 - 3.5 | 15 |
| 6 | Hand Dryer | 2 | 1000 | 2000 | | 8.70 | | 20 | 2 | 2 - 3.5 | 15 |
| 7 | Hand Dryer | 2 | 1000 | 2000 | 8.70 | | | 20 | 2 | 2 - 3.5 | 15 |
| 8 | Hand Dryer | 2 | 1000 | 2000 | 8.70 | | | 20 | 2 | 2 - 3.5 | 15 |
| 9 | Hand Dryer | 2 | 1000 | 2000 | | | 8.70 | 20 | 2 | 2 - 3.5 | 15 |
| 10 | Hand Dryer | 2 | 1000 | 2000 | | | 8.70 | 20 | 2 | 2 - 3.5 | 15 |
| 11 | Spare | | | | | 4.35 | | 20 | | | |
| 12 | Spare | | | | | 4.35 | | 20 | | | |
| Total Connected Load | | | | | 26.79 | 21.32 | 28.36 | | | | |

| Computations : | Use: | Use : | Circuit Breaker : |
|---|---|---|---|
| I = 28.36 x 1.73 @ 80% Demand Factor<br>= 39.25 Amperes | 3 - 14.0 mm² THHN<br>1 - 8.0 mm² Ground | 25 mm Ø | 60AT, 3P, 230 V<br>MCCB |

## SCHEDULE OF LOADS

LP - B ( Lighting Panel ) — Mounting : Surface Mounted

| Ckt. No. | Load Description | No. of Lights | Watts | Total Watts | Phase Connection AB | Phase Connection BC | Phase Connection CA | Circuit Breaker AT | Circuit Breaker P | Wire MM² | Conduit MM |
|---|---|---|---|---|---|---|---|---|---|---|---|
| 1 | Lighting Outlet | 8 | 100 | 800 | 3.48 | | | 20 | 2 | 2 - 3.5 | 15 |
| 2 | Lighting Outlet | 8 | 100 | 800 | 3.48 | | | 20 | 2 | 3.5 | 15 |
| 3 | Lighting Outlet | 11 | 100 | 1100 | | | 4.78 | 20 | 2 | 3.5 | 15 |
| 4 | Lighting Outlet | 13 | 100 | 1300 | | | 5.65 | 20 | 2 | 3.5 | 15 |
| 5 | Lighting Outlet | 8 | 100 | 800 | | 3.48 | | 20 | 2 | 3.5 | 15 |
| 6 | Lighting Outlet | 9 | 100 | 900 | | 3.91 | | 20 | 2 | 3.5 | 15 |
| 7 | Lighting Outlet | 6 | 100 | 600 | 2.61 | | | 20 | 2 | 3.5 | 15 |
| 8 | Lighting Outlet | 13 | 100 | 1300 | 5.65 | | | 20 | 2 | 3.5 | 15 |
| 9 | Spare | | 100 | 1000 | | | 4.35 | 20 | 2 | | |
| 10 | Spare | | 100 | 1000 | | | 4.35 | 20 | 2 | | |
| 11 | Spare | | 100 | 1000 | | 4.35 | | 20 | 2 | | |
| 12 | Spare | | 100 | 1000 | | 4.35 | | 20 | 2 | | |
| Total Connected Loads | | | | | 15.22 | 16.09 | 19.13 | | | | |

| Computations : | Use: | Use : | Circuit Breaker : |
|---|---|---|---|
| I = 19.13 x 1.73 @ 80% Demand Factor<br>= 26.48 Amperes | 3 - 14.0 mm² THHN<br>1 - 8.0 mm² Ground | 25 mm Ø | 60AT, 3P, 230 V<br>MCCB |

## SCHEDULE OF LOADS

PP - B ( Power Panel ) — Mounting : Surface Mounted

| Ckt. No. | Load Description | No. of Outlets | Watts Duplex | Total Watts | Phase Connection AB | Phase Connection BC | Phase Connection CA | Circuit Breaker AT | Circuit Breaker P | Wire MM² | Conduit MM |
|---|---|---|---|---|---|---|---|---|---|---|---|
| 1 | C.O. - Oulet | 8 | 360 | 2880 | 6.26 | | | 20 | 2 | 2 - 3.5 | 15 |
| 2 | C.O. - Oulet | 6 | 360 | 2160 | 4.70 | | | 20 | 2 | 2 - 3.5 | 15 |
| 3 | C.O. - Oulet | 6 | 360 | 2160 | | | 4.70 | 20 | 2 | 2 - 3.5 | 15 |
| 4 | C.O. - Oulet | 6 | 360 | 2160 | | | 4.70 | 20 | 2 | 2 - 3.5 | 15 |
| 5 | C.O. - Oulet | 4 | 360 | 1440 | | 1.83 | | 20 | 2 | 2 - 3.5 | 15 |
| 6 | C.O. - Oulet | 8 | 360 | 2880 | | 6.26 | | 20 | 2 | 2 - 3.5 | 15 |
| 7 | Hand Dryer | 2 | 1000 | 2000 | 8.70 | | | 20 | 2 | 2 - 3.5 | 15 |
| 8 | Hand Dryer | 2 | 1000 | 2000 | 8.70 | | | 20 | 2 | 2 - 3.5 | 15 |
| 9 | Hand Dryer | 2 | 1000 | 2000 | | | 8.70 | 20 | 2 | 2 - 3.5 | 15 |
| 10 | Hand Dryer | 2 | 1000 | 2000 | | | 8.70 | 20 | 2 | 2 - 3.5 | 15 |
| 11 | Hand Dryer | 2 | 1000 | 2000 | | 8.70 | | 20 | 2 | 2 - 3.5 | 15 |
| 12 | Spare | | | 1000 | | 4.35 | | 20 | 2 | | |
| Total Connected Loads | | | | | 28.36 | 21.14 | 26.8 | | | | |

| Computations : | Use: | Use : | Circuit Breaker : |
|---|---|---|---|
| I = 28.36 x 1.73 @ 80% Demand Factor<br>= 49.06 Amperes | 3 - 14.0 mm² THHN<br>1 - 8.0 mm² Ground | 25 mm Ø | 60AT, 3P, 230 V<br>MCCB |

| OWNER : | PROJECT : | DESIGN BY: | SUBMITTED BY: | RECOMMENDING APPROVAL: | APPROVED BY : | SHEET CONTENT : | SHEET NO : |
|---|---|---|---|---|---|---|---|
| PHILIPPINE SPORTS COMMISSION<br>RMSC, PABLO OCAMPO SR. ST, MALATE, MANILA | NINOY AQUINO STADIUM REHABILITATION PROJECT<br>RMSC, PABLO OCAMPO SR. ST, MALATE, MANILA | DRAWN BY:<br>CHECK BY:<br>DATE: | ENGR. PEDRO I. PINEDA JR.<br>HEAD - ENGINEERING UNIT | DIR. MERLITA R. IBAY<br>DEPUTY EXECUTIVE DIRECTOR | HON. WILLIAM I. RAMIREZ<br>CHAIRMAN | AS SHOWN | E<br>15 22 |

## SCHEDULE OF LOADS

PPAC - A ( Power Panel Air Con ) — Mounting : Surface Mounted

| Ckt. No. | Load Description | HP | Watts/HP | Total Watts | Phase Connection AB | Phase Connection BC | Phase Connection CA | Circuit Breaker AT | Circuit Breaker P | Wire MM² | Conduit MM |
|---|---|---|---|---|---|---|---|---|---|---|---|
| 1 | Split Type A/C | 2.5 | 746 | 1865 | 8.11 | | | 30 | 2 | 2 - 5.5 | 20 |
| 2 | Split Type A/C | 2.0 | 746 | 1865 | 6.49 | | | 30 | 2 | 2 - 5.5 | 20 |
| 3 | Split Type A/C | 2.0 | 746 | 1865 | | | 8.11 | 30 | 2 | 2 - 5.5 | 20 |
| 4 | Split Type A/C | 2.0 | 746 | 1492 | | | 6.49 | 30 | 2 | 2 - 5.5 | 20 |
| 5 | Split Type A/C | 2.5 | 746 | 1865 | | 8.11 | | 30 | 2 | 2 - 5.5 | 20 |
| 6 | Split Type A/C | 2.0 | 746 | 1492 | | 6.49 | | 30 | 2 | 2 - 5.5 | 20 |
| 7 | Split Type A/C | 2.5 | 746 | 1865 | 8.11 | | | 30 | 2 | 2 - 5.5 | 20 |
| 8 | Split Type A/C | 2.5 | 746 | 1865 | 8.11 | | | 30 | 2 | 2 - 5.5 | 20 |
| 9 | Split Type A/C | 2.5 | 746 | 1865 | | | 8.11 | 30 | 2 | 2 - 5.5 | 20 |
| 10 | Split Type A/C | 2.5 | 746 | 1865 | | | 8.11 | 30 | 2 | 2 - 5.5 | 20 |
| 11 | Spare | | | | | 8.11 | | 30 | 2 | | |
| 12 | Spare | | | | | 8.11 | | 30 | 2 | | |
| Total Connected Loads | | | | | 30.82 | 22.71 | 30.82 | | | | |

| Computations : | Use: | Use : | Circuit Breaker : |
|---|---|---|---|
| I = 30.82 + ( 8.11 x 0.25 ) x 1.73 @ 100% Demand Factor<br>= 56.83 Amperes | 3 - 30 mm² THHN<br>1 - 8.0 mm² Ground | 32 mm Ø | 70 AT, 3P, 230 V<br>MCCB |

## SCHEDULE OF LOADS

PPAC - B ( Power Panel Air Con ) — Mounting : Surface Mounted

| Ckt. No. | Load Description | Capacity | Watts/HP | Total Watts | Phase Connection AB | Phase Connection BC | Phase Connection CA | Circuit Breaker AT | Circuit Breaker P | Wire MM² | Conduit MM |
|---|---|---|---|---|---|---|---|---|---|---|---|
| 1 | Split Type A/C | 2.5Hp | 746 | 1865 | 8.11 | | | 30 | 2 | 2 - 5.5 | 20 |
| 2 | Split Type A/C | 2.5Hp | 746 | 1865 | 8.11 | | | 30 | 2 | 2 - 5.5 | 20 |
| 3 | Split Type A/C | 2.5Hp | 746 | 1865 | | | 8.11 | 30 | 2 | 2 - 5.5 | 20 |
| 4 | Split Type A/C | 2.5Hp | 746 | 1865 | | | 8.11 | 30 | 2 | 2 - 5.5 | 20 |
| 5 | Split Type A/C | 2.5Hp | 746 | 1865 | | 8.11 | | 30 | 2 | 2 - 5.5 | 20 |
| 6 | Split Type A/C | 2.5Hp | 746 | 1865 | | 8.11 | | 30 | 2 | 2 - 5.5 | 20 |
| 7 | Spare | | | 1865 | 8.11 | | | 30 | 2 | | |
| 8 | Spare | | | 1865 | | | 8.11 | 30 | 2 | | |
| Total Connected Loads | | | | | 24.33 | 16.22 | 24.33 | | | | |

| Computations : | Use: | Use: | Circuit Breaker : |
|---|---|---|---|
| I = 24.33 + ( 8.11 x 0.25 )x 1.73 @ 100% Demand Factor<br>= 45.60 Amperes | 3 - 22mm² THHN<br>1 - 8.0 mm² Ground | 32 mm Ø | 60AT, 3P, 230 V<br>MCCB |

## SCHEDULE OF LOADS

DP - A ( Distribution Panel ) — Mounting : Surface Mounted

| CKT. No | Load Description | Watts | Total Watts | Volts V | Phase Connection AB | Phase Connection BC | Phase Connection CA | Circuit Breaker AT | Circuit Breaker P | Wire MM² | Conduit MM |
|---|---|---|---|---|---|---|---|---|---|---|---|
| 1 | LP - A | | | 220 | 19.13 | 18.27 | 19.13 | 60 | 3 | 3 - 14 | 25 |
| 2 | PP - A | | | 220 | 26.79 | 21.32 | 28.36 | 60 | 3 | 3 - 14 | 25 |
| 3 | PPAC - A | | | 220 | 30.82 | 22.71 | 30.82 | 60 | 3 | 3 - 14 | 32 |
| 4 | Score Board Panel | | | 220 | 6.52 | 6.52 | 6.52 | 60 | 3 | 3 - 14 | 25 |
| 5 | Space | | | 220 | | | | 50 | 3 | | |
| 6 | Space | | | 220 | | | | 50 | 3 | | |
| Total Connected Loads | | | | | 83.26 | 68.82 | 84.83 | | | | |

| Computations : | Use: | Use: | Circuit Breaker : |
|---|---|---|---|
| I = 84.83 + ( 8.11 x 0.25 ) x 1.73 @ 80% D .Factor<br>= 120.21 Amperes | 3 -80 mm² THHN<br>1 -30 mm² Ground Wire | 50 mm Ø | 200 AT, 3P, 230 V<br>MCCB |

## SCHEDULE OF LOADS

DP - B ( Distribution Panel ) — Mounting : Surface Mounted

| CKT. No | Load Description | Watts | Total Watts | Volts V | Phase Connection AB | Phase Connection BC | Phase Connection CA | Circuit Breaker AT | Circuit Breaker P | Wire MM² | Conduit MM |
|---|---|---|---|---|---|---|---|---|---|---|---|
| 1 | LP - B | | | 220 | 15.22 | 16.09 | 19.13 | 60 | 3 | 3 - 14 | 25 |
| 2 | PP - B | | | 220 | 28.36 | 21.14 | 26.80 | 60 | 3 | 3 - 14 | 25 |
| 3 | PPAC - B | | | 220 | 24.33 | 16.22 | 24.33 | 60 | 3 | 3 - 22 | 32 |
| 4 | Score Board Panel | | | 220 | 6.52 | 6.52 | 6.52 | 60 | 3 | 3 - 14 | 25 |
| 5 | Space | | | 220 | | | | 50 | 3 | | |
| 6 | Space | | | 220 | | | | 50 | 3 | | |
| Total Connected Loads | | | | | 74.43 | 59.97 | 76.78 | | | | |

| Computations : | Use : | Use: | Circuit Breaker : |
|---|---|---|---|
| I = 76.78 + ( 8.11 x 0.25 ) x 1.73 @ 80% Demand Factor<br>= 109.07 Amperes | 3 - 80 mm2, THHN<br>1 - 30 mm2 Ground | 50 mm Ø | 200 AT, 3P, 230 V<br>MCCB |

## SCHEDULE OF LOADS

EMDP - Emergency Main Distribution Panel — Mounting : Floor Standing

| CKT. No | Load Description | HP | FLA | Voltage V | Phase Connection AB | Phase Connection BC | Phase Connection CA | Circuit Breaker AT | Circuit Breaker P | Wire MM² | Conduit MM |
|---|---|---|---|---|---|---|---|---|---|---|---|
| 1 | DP-A | | | 220 | 83.26 | 68.82 | 84.83 | 200 | 3 | 3 - 80 | 50 |
| 2 | DP - B | | | 220 | 74.43 | 59.97 | 76.78 | 200 | 3 | 3 - 80 | 50 |
| 3 | MDB | | | 220 | 146.00 | 155.60 | 155.60 | 500 | 3 | 3 - 250 | 80 |
| 4 | Jockey Pump | 5 | 16 | 220 | 16.00 | 16.00 | 16.00 | 40 | 3 | 3 - 5.5 | 20 |
| 5 | SP - Sewage Pump | 5 | 16 | 220 | 16.00 | 16.00 | 16.00 | 40 | 3 | 3 - 5.5 | 20 |
| 6 | LP - Power House | | | 220 | 17.39 | 17.39 | 17.39 | 40 | 3 | 3 - 8.0 | 20 |
| 7 | ( Fire Pump ) | 36 - 50 | 126 | 220 | | | | 300 | 3 | 3 - 80 | 50 |
| | | | | | | | | | | | |
| Total Connected Loads | | | | | 353.08 | 333.78 | 366.6 | | | | |

| Computations : | Use: | Use: | Circuit Breaker : |
|---|---|---|---|
| I = 366.6 x 1.73 @ 80% Demand Factor<br>= 634.22 Amperes | 2 sets 3 250 mm² THHN<br>2 - 50 mm² Ground Wire | 2 - 80 mm Ø | 800 AT, 3P, 230 V<br>MCCB |

| OWNER : | PROJECT : | DESIGN BY: | SUBMITTED BY: | RECOMMENDING APPROVAL: | APPROVED BY : | SHEET CONTENT : | SHEET NO : |
|---|---|---|---|---|---|---|---|
| **PHILIPPINE SPORTS COMMISSION**<br>RMSC, PABLO OCAMPO SR. ST, MALATE, MANILA | **NINOY AQUINO STADIUM REHABILITATION PROJECT**<br>RMSC, PABLO OCAMPO SR. ST, MALATE, MANILA | DRAWN BY:<br>CHECK BY:<br>DATE: | ENGR. PEDRO I. PINEDA JR.<br>HEAD - ENGINEERING UNIT | DIR. MERLITA R. IBAY<br>DEPUTY EXECUTIVE DIRECTOR | HON. WILLIAM I. RAMIREZ<br>CHAIRMAN | AS SHOWN | E<br>16 22 |

## SCHEDULE OF LOADS

Chiller Pumps Panel : Mounting : Floor Standing

| CKT. No | Load Description | KW | FLA | Volts | 3 Phase | Circuit Breaker | | Wire | Conduit |
|---|---|---|---|---|---|---|---|---|---|
| | | | | V | A | AT | P | MM² | MM |
| 1 | CHWP - 1 | 11 | 39 | 220 | 39 | 70 | 3 | 3 - 14 | 25 |
| 2 | CHWP - 2 | 11 | 39 | 220 | 39 | 70 | 3 | 3 - 14 | 25 |
| 3 | CHWP - 3 | 11 | 39 | 220 | 39 | 70 | 3 | 3 - 14 | 25 |
| 4 | COWP - 1 | 11 | 39 | 220 | 39 | 70 | 3 | 3 - 14 | 25 |
| 5 | COWP - 2 | 11 | 39 | 220 | 39 | 70 | 3 | 3 - 14 | 25 |
| 6 | CTWP - 1 | 11 | 39 | 220 | 39 | 70 | 3 | 3 - 14 | 25 |
| 7 | CTWP - 2 | 11 | 39 | 220 | 39 | 70 | 3 | 3 - 14 | 25 |
| 8 | Spare | | | 220 | | | | | |
| Total Connected Loads | | | | | 273 | | | | |

| Computations : | Use: | Use : | Circuit Breaker : |
|---|---|---|---|
| I = ( 39 x 1.25 ) +( 39 x 6 ) @ 100% Demand Factor<br>= 282.75 Amperes | 1 set 3-200 mm² THHN<br>1 -50 mm² Ground Wire | 1 -80 mm | 700 AT, 3P, 230 V<br>MCCB |

AHU - Panel ( Typical : Zone 1 - 4 ) Mounting : Surface Mounted

| CKT. No | Load Description | KW | FLA | Volts | 3 Phase | Circuit Breaker | | Wire | Conduit |
|---|---|---|---|---|---|---|---|---|---|
| | | | | V | A | AT | P | MM² | MM |
| 1 | AHU - 1 | 18.5 | 63 | 220 | 63 | 150 | 3 | 3 - 22 | 32 |
| 2 | AHU - 2 | 18.5 | 63 | 220 | 63 | 150 | 3 | 3 - 22 | 32 |
| Total Connected Loads | | | | | 128 | | | | |

| Computations : | Use: | Use: | Circuit Breaker : |
|---|---|---|---|
| I = (63 x 1.25 )+ 63 x @ 100% Demand Factor<br>= 141.75 Amperes | 1 set 3 - 80 mm² THHN<br>1 - 30mm² Ground Wire | 1- 50 mm Ø | 300 AT, 3P, 230 V<br>MCCB |

## SCHEDULE OF LOADS

Chiller - 1 Mounting : Floor Standing

| CKT. No | Load Description | KW | FLA | Volts | 3 Phase | Circuit Breaker | | Wire | Conduit |
|---|---|---|---|---|---|---|---|---|---|
| | | | | V | A | AT | P | MM² | MM |
| 1 | Chiller 250 TR | 171 | 426 | 220 | 426 | 1200 | 3 | 6 - 250 | 80 |
| | | | | | | | | | |
| Total Connected Loads | | | | | 426 | | | | |

| Computations : | Use: | Use: | Circuit Breaker : |
|---|---|---|---|
| I = (426 x 1.25 ) @ 100% Demand Factor<br>= 532.50 Amperes | 2 sets 3 - 250mm² THHN<br>2 - 50mm² Ground Wire | 2 - 80mm Ø | 1200 AT, 3P, 230 V<br>MCCB |

## SCHEDULE OF LOADS

Chiller - 2 Mounting : Floor Standing

| CKT. No | Load Description | KW | FLA | Volts | 3 Phase | Circuit Breaker | | Wire | Conduit |
|---|---|---|---|---|---|---|---|---|---|
| | | | | V | A | AT | P | MM² | MM |
| 1 | Chiller | 171 | 426 | 220 | 426 | 1200 | 3 | 6 - 250 | 80 |
| | | | | | | | | | |
| Total Connected Loads | | | | | 426 | | | | |

| Computations : | Use: | Use: | Circuit Breaker : |
|---|---|---|---|
| I = (426 x 1.25 ) @100% Demand Factor<br>= 532.50 Amperes | 2 sets 3 - 250mm² THHN<br>2 - 50mm² Ground Wire | 2 - 80mm Ø | 1200AT, 3P, 230 V<br>MCCB |

## SCHEDULE OF LOADS

LVSG - 1 ( Low Voltage Switchgear ) Mounting : Floor Standing

| CKT. No | Load Description | Nos. | KW | FLA | 3 Phase | Circuit Breaker | | Wire | Conduit |
|---|---|---|---|---|---|---|---|---|---|
| | | | | A | A | AT | P | MM² | MM |
| 1 | Chiller - 1 | 1 | 171 | 426 | 426.00 | 1,200 | 3 | 6 - 250 | 80 |
| 2 | AHU - 1 & 2 | 2 | 18.5 | 63 | 126.00 | 300 | 3 | 3 - 80 | 50 |
| 3 | AHU - 7 & 8 | 2 | 18.5 | 63 | 126.00 | 300 | 3 | 3 - 80 | 50 |
| 4 | EMDP - Panel | 1 | | | 366.60 | 800 | 3 | 6 - 250 | 80 |
| 5 | Spare | | | | | 300 | 3 | | |
| 6 | Spare | | | | | 300 | 3 | | |
| Total Connected Loads | | | | | 1044.6 | | | | |

| Computations : | Use: | Use: | Circuit Breaker : |
|---|---|---|---|
| I = 1044.60 Amps + ( 426 x 1.25 ) @ 80% Demand Factor<br>= 1577.10 Amperes | Existing Wires / Cable | Existing<br>Conduit | 3000 AT, 3P, 230 V<br>ACB |

## SCHEDULE OF LOADS

LVSG - 2 ( Low Voltage Switchgear ) Mounting : Floor Standing

| CKT. No | Load Description | Nos. | KW | FLA | 3 Phase | Circuit Breaker | | Wire | Conduit |
|---|---|---|---|---|---|---|---|---|---|
| | | | | A | A | AT | P | MM² | MM |
| 1 | Chiller - 2 | 1 | 171 | 426 | 426.00 | 1200 | 3 | 6 - 250 | 80 |
| 2 | AHU - 3 & 4 | 2 | 18.5 | 63 | 126.00 | 300 | 3 | 3 - 80 | 50 |
| 3 | AHU - 5 & 6 | 2 | 18.5 | 63 | 126.00 | 300 | 3 | 3 - 80 | 50 |
| 4 | Chiller Pumps | 7 | 11 | 39 | 273.00 | 700 | 3 | 3 - 200 | 80 |
| 5 | Spare | | | | | 300 | 3 | | |
| 6 | Spare | | | | | 300 | 3 | | |
| Total Connected Loads | | | | | 951.00 | | | | |

| Computations : | Use: | Use: | Circuit Breaker : |
|---|---|---|---|
| I = 951 Amps + ( 426 x 1.25 ) @ 80% Demand Factor<br>= 1483.50 Amperes | Existing Wires / Cables | Existing<br>Conduit | 3000 AT, 3P, 230 V<br>ACB |

## Lighting System

| Pole / Fixture Summary | | | | | | |
|---|---|---|---|---|---|---|
| Pole ID | Pole Height | Mtg Height | Fixture Qty | Luminaire Type | Load | Circuit |
| A1–A26, A59–A84 | -- | 11.0 | 1 | TLC–LED–400 | 0.40 kW | A |
| A27–A30, A33–A36, A39–A46, A49–A52, A55–A58 | -- | 13.5 | 1 | TLC–LED–400 | 0.40 kW | A |
| A31–A32, A37–A38, A47–A48, A53–A54 | -- | 13.5 | 2 | TLC–LED–400 | 0.80 kW | A |
| S1–S8 | -- | 13.5 | 1 | TLC–LED–400 | 0.40 kW | S |
| 92 | | | 100 | | 40.00 kW | |

| Circuit Summary | | | |
|---|---|---|---|
| Circuit | Description | Load | Fixture Qty |
| A | | 36.8 kW | 92 |
| S | | 3.2 kW | 8 |

| Fixture Type Summary | | | | | | | |
|---|---|---|---|---|---|---|---|
| Type | Source | Wattage | Lumens | L90 | L80 | L70 | Quantity |
| TLC–LED–400 | LED 5700K – 90 CRI | 400W | 35,340 | >81,000 | >81,000 | >81,000 | 100 |

## Light Level Summary

| Calculation Grid Summary | | | | | | | | |
|---|---|---|---|---|---|---|---|---|
| Grid Name | Calculation Metric | Illumination | | | | | Circuits | Fixture Qty |
| | | Ave | Min | Max | Min/Max | Min/Ave | | |
| 01 Basketball Field | Horizontal Illuminance | 2158 | 1739 | 2493 | 0.70 | 0.81 | A | 92 |
| 02 Basketball Field | North Illuminance | 1519 | 1061 | 1697 | 0.63 | 0.70 | A | 92 |
| 02 Basketball Field | South Illuminance | 1519 | 1061 | 1697 | 0.63 | 0.70 | A | 92 |
| 03 Auditorium | Horizontal Illuminance | 45.8 | 10 | 119 | 0.08 | 0.22 | S | 8 |

# PROJECT SUMMARY

| OWNER : | PROJECT : | DESIGN BY: | SUBMITTED BY: | RECOMMENDING APPROVAL: | APPROVED BY : | SHEET CONTENT : | SHEET NO : |
|---|---|---|---|---|---|---|---|
| PHILIPPINE SPORTS COMMISSION<br>RMSC, PABLO OCAMPO SR. ST, MALATE, MANILA | NINOY AQUINO STADIUM REHABILITATION PROJECT<br>RMSC, PABLO OCAMPO SR. ST, MALATE, MANILA | DRAWN BY:<br>CHECK BY:<br>DATE: | ENGR. PEDRO I. PINEDA JR.<br>HEAD - ENGINEERING UNIT | DIR. MERLITA R. IBAY<br>DEPUTY EXECUTIVE DIRECTOR | HON. WILLIAM I. RAMIREZ<br>CHAIRMAN | AS SHOWN | E<br>18 22 |

## EQUIPMENT LIST FOR AREAS SHOWN

| Pole | | | | Luminaires | | | | |
|---|---|---|---|---|---|---|---|---|
| QTY | LOCATION | SIZE | GRADE ELEVATION | MOUNTING HEIGHT | LUMINAIRE TYPE | QTY / POLE | THIS GRID | OTHER GRIDS |
| 52 | A1-A26<br>A59-A84 | | 11m | 11m | TLC-LED-400 | 1 | 1 | 0 |
| 24 | A27-A30<br>A33-A36<br>A39-A46<br>A49-A52<br>A55-A58 | | 13.5m | 13.5m | TLC-LED-400 | 1 | 1 | 0 |
| 8 | A31-A32<br>A37-A38<br>A47-A48<br>A53-A54 | | 13.5m | 13.5m | TLC-LED-400 | 2 | 2 | 0 |
| 84 | TOTALS | | | | | 92 | 92 | 0 |

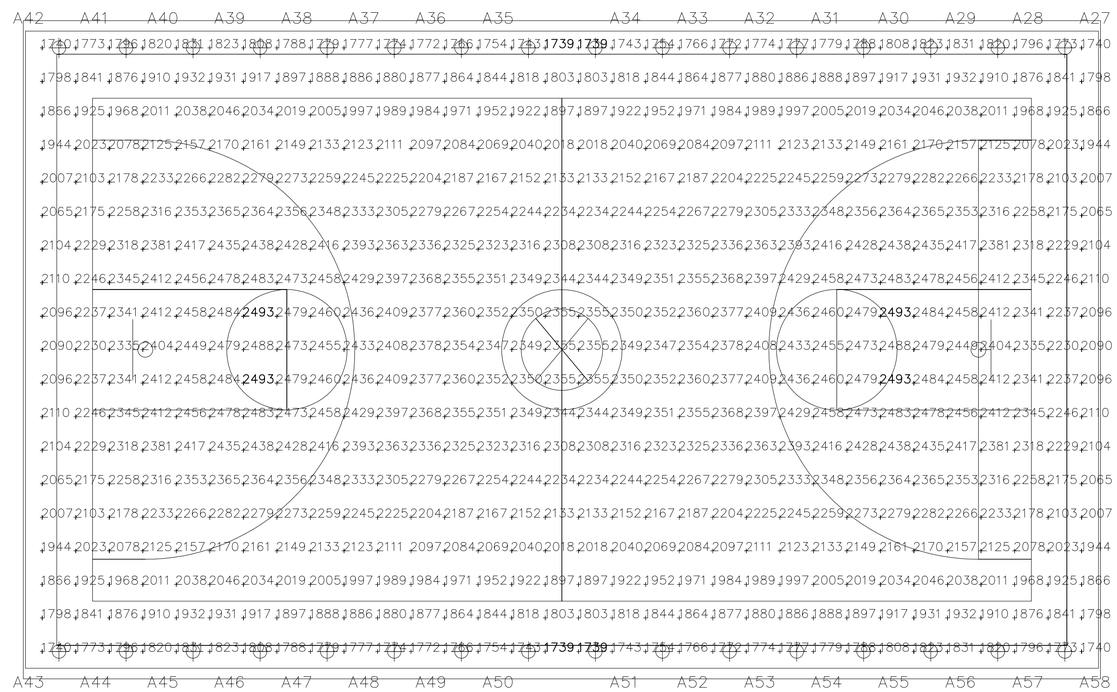


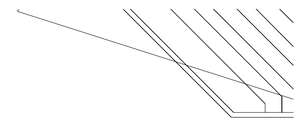

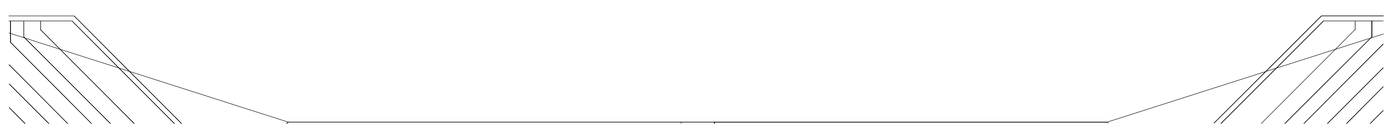

Pole location(s) ⊕ dimensions are relative to 0,0 reference point(s) ⊗

SCALE 1: 200

0 10m 20m

## GRID SUMMARY

**Name:** **01 Basketball Field**
Size: 32m x 19m
Spacing: 1.0m x 1.0m
Height: 0.0m above grade

## ILLUMINATION SUMMARY

MAINTAINED HORIZONTAL LUX

| | Entire Grid |
|---|---|
| **Scan Average:** | **2157.61** |
| Maximum: | 2493 |
| Minimum: | 1739 |
| Min / Avg: | 0.81 |
| **Min / Max:** | **0.70** |
| UG (adjacent pts): | 1.07 |
| CU: | 0.41 |
| No. of Points: | 608 |

LUMINAIRE INFORMATION

Color / CRI: 5700K - 90 CRI
Luminaire Output: 35,340 lumens
**No. of Luminaires:** **92**
Total Load: 36.8 kW

Lumen Maintenance

| Luminaire Type | L90 hrs | L80 hrs | L70 hrs |
|---|---|---|---|
| TLC-LED-400 | >81,000 | >81,000 | >81,000 |

Reported per TM-21-11. See luminaire datasheet for details.

**Guaranteed Performance:** The ILLUMINATION described above is guaranteed per your --- Warranty document and includes a 0.95 dirt depreciation factor.

**Field Measurements:** Individual field measurements may vary from computer-calculated predictions and should be taken in accordance with IESNA RP-6-15.

**Electrical System Requirements:** Refer to Amperage Draw Chart and/or the **"Control System Summary"** for electrical sizing.

**Installation Requirements:** Results assume ?3% nominal voltage at line side of the driver and structures located within 3 feet (1m) of design locations.

# ILLUMINATION SUMMARY

| OWNER : | PROJECT : | DESIGN BY: | SUBMITTED BY: | RECOMMENDING APPROVAL: | APPROVED BY : | SHEET CONTENT : | SHEET NO : |
|---|---|---|---|---|---|---|---|
| **PHILIPPINE SPORTS COMMISSION**<br>RMSC, PABLO OCAMPO SR. ST, MALATE, MANILA | **NINOY AQUINO STADIUM REHABILITATION PROJECT**<br>RMSC, PABLO OCAMPO SR. ST, MALATE, MANILA | DRAWN BY:<br>CHECK BY:<br>DATE: | ENGR. PEDRO I. PINEDA JR.<br>HEAD - ENGINEERING UNIT | DIR. MERLITA R. IBAY<br>DEPUTY EXECUTIVE DIRECTOR | HON. WILLIAM I. RAMIREZ<br>CHAIRMAN | AS SHOWN | E<br>19 22 |

## EQUIPMENT LIST FOR AREAS SHOWN

| Pole | | | | Luminaires | | | | |
|---|---|---|---|---|---|---|---|---|
| QTY | LOCATION | SIZE | GRADE ELEVATION | MOUNTING HEIGHT | LUMINAIRE TYPE | QTY / POLE | THIS GRID | OTHER GRIDS |
| 52 | A1-A26<br>A59-A84 | | 11m | 11m | TLC-LED-400 | 1 | 1 | 0 |
| 24 | A27-A30<br>A33-A36<br>A39-A46<br>A49-A52<br>A55-A58 | | 13.5m | 13.5m | TLC-LED-400 | 1 | 1 | 0 |
| 8 | A31-A32<br>A37-A38<br>A47-A48<br>A53-A54 | | 13.5m | 13.5m | TLC-LED-400 | 2 | 2 | 0 |
| 84 | TOTALS | | | | | 92 | 92 | 0 |

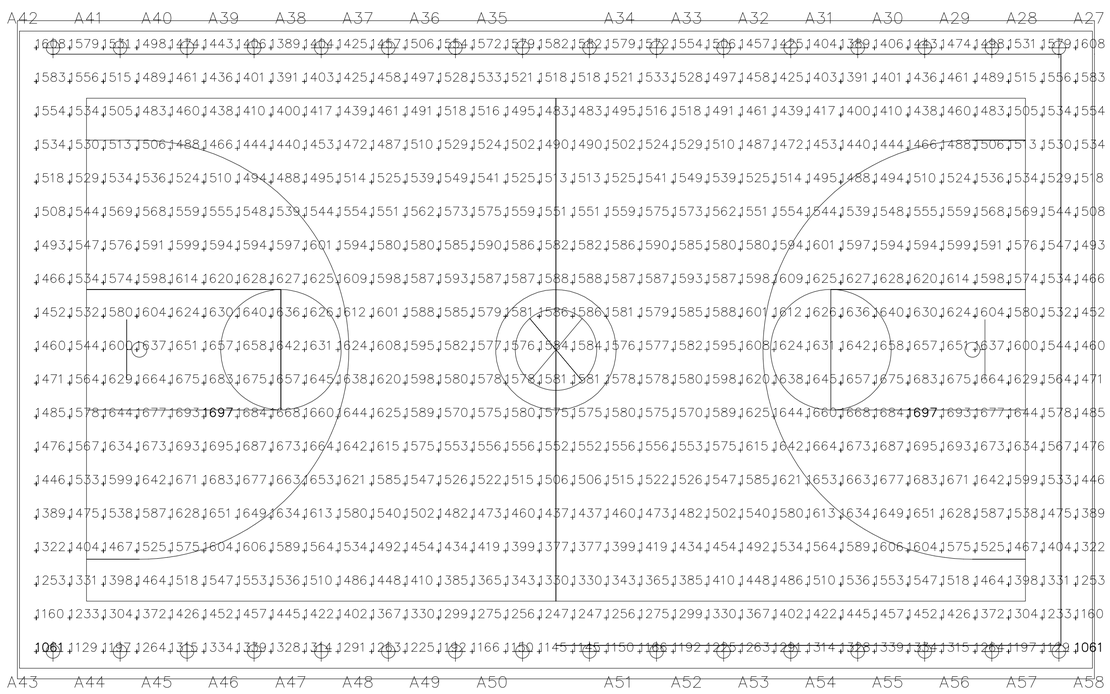

SCALE 1: 200

0 10m 20m

## GRID SUMMARY

**Name:** **02 Basketball Field**
Size: 32m x 19m
Spacing: 1.0m x 1.0m
Height: 1.5m above grade

## ILLUMINATION SUMMARY

MAINTAINED VERTICAL LUX: 15° Tilt

| | Entire Grid |
|---|---|
| **Scan Average:** | **1518.54** |
| Maximum: | 1697 |
| Minimum: | 1061 |
| Min / Avg: | 0.70 |
| **Min / Max:** | **0.63** |
| UG (adjacent pts): | 1.09 |
| CU: | 0.41 |
| No. of Points: | 608 |

LUMINAIRE INFORMATION

Color / CRI: 5700K - 90 CRI
Luminaire Output: 35,340 lumens
**No. of Luminaires:** **92**
Total Load: 36.8 kW

Lumen Maintenance

| Luminaire Type | L90 hrs | L80 hrs | L70 hrs |
|---|---|---|---|
| TLC-LED-400 | >81,000 | >81,000 | >81,000 |

Reported per TM-21-11. See luminaire datasheet for details.

**Guaranteed Performance:** The ILLUMINATION described above is guaranteed per your --- Warranty document and includes a 0.95 dirt depreciation factor.

**Field Measurements:** Individual field measurements may vary from computer-calculated predictions and should be taken in accordance with IESNA RP-6-15.

**Electrical System Requirements:**Refer to Amperage Draw Chart and/or the **"Control System Summary"** for electrical sizing.

**Installation Requirements:**Results assume ?3% nominal voltage at line side of the driver and structures located within 3 feet (1m) of design locations.

# ILLUMINATION SUMMARY

| OWNER : | PROJECT : | DESIGN BY: | SUBMITTED BY: | RECOMMENDING APPROVAL: | APPROVED BY : | SHEET CONTENT : | SHEET NO : |
|---|---|---|---|---|---|---|---|
| **PHILIPPINE SPORTS COMMISSION**<br>RMSC, PABLO OCAMPO SR. ST, MALATE, MANILA | **NINOY AQUINO STADIUM REHABILITATION PROJECT**<br>RMSC, PABLO OCAMPO SR. ST, MALATE, MANILA | DRAWN BY:<br>CHECK BY:<br>DATE: | ENGR. PEDRO I. PINEDA JR.<br>HEAD - ENGINEERING UNIT | DIR. MERLITA R. IBAY<br>DEPUTY EXECUTIVE DIRECTOR | HON. WILLIAM I. RAMIREZ<br>CHAIRMAN | AS SHOWN | E<br>20 22 |

## EQUIPMENT LIST FOR AREAS SHOWN

| Pole | | | | Luminaires | | | | |
|---|---|---|---|---|---|---|---|---|
| QTY | LOCATION | SIZE | GRADE ELEVATION | MOUNTING HEIGHT | LUMINAIRE TYPE | QTY / POLE | THIS GRID | OTHER GRIDS |
| 52 | A1-A26<br>A59-A84 | | 11m | 11m | TLC-LED-400 | 1 | 1 | 0 |
| 24 | A27-A30<br>A33-A36<br>A39-A46<br>A49-A52<br>A55-A58 | | 13.5m | 13.5m | TLC-LED-400 | 1 | 1 | 0 |
| 8 | A31-A32<br>A37-A38<br>A47-A48<br>A53-A54 | | 13.5m | 13.5m | TLC-LED-400 | 2 | 2 | 0 |
| 84 | TOTALS | | | | | 92 | 92 | 0 |

## GRID SUMMARY

**Name:** **02 Basketball Field**
Size: 32m x 19m
Spacing: 1.0m x 1.0m
Height: 1.5m above grade

## ILLUMINATION SUMMARY

MAINTAINED VERTICAL LUX: 15° Tilt

| | Entire Grid |
|---|---|
| **Scan Average:** | **1518.54** |
| Maximum: | 1697 |
| Minimum: | 1061 |
| Min / Avg: | 0.70 |
| **Min / Max:** | **0.63** |
| UG (adjacent pts): | 1.09 |
| CU: | 0.41 |
| No. of Points: | 608 |

LUMINAIRE INFORMATION

Color / CRI: 5700K - 90 CRI
Luminaire Output: 35,340 lumens
**No. of Luminaires:** **92**
Total Load: 36.8 kW

Lumen Maintenance

| Luminaire Type | L90 hrs | L80 hrs | L70 hrs |
|---|---|---|---|
| TLC-LED-400 | >81,000 | >81,000 | >81,000 |

Reported per TM-21-11. See luminaire datasheet for details.

**Guaranteed Performance:** The ILLUMINATION described above is guaranteed per your --- Warranty document and includes a 0.95 dirt depreciation factor.

**Field Measurements:** Individual field measurements may vary from computer-calculated predictions and should be taken in accordance with IESNA RP-6-15.

**Electrical System Requirements:** Refer to Amperage Draw Chart and/or the **"Control System Summary"** for electrical sizing.

**Installation Requirements:** Results assume ?3% nominal voltage at line side of the driver and structures located within 3 feet (1m) of design locations.

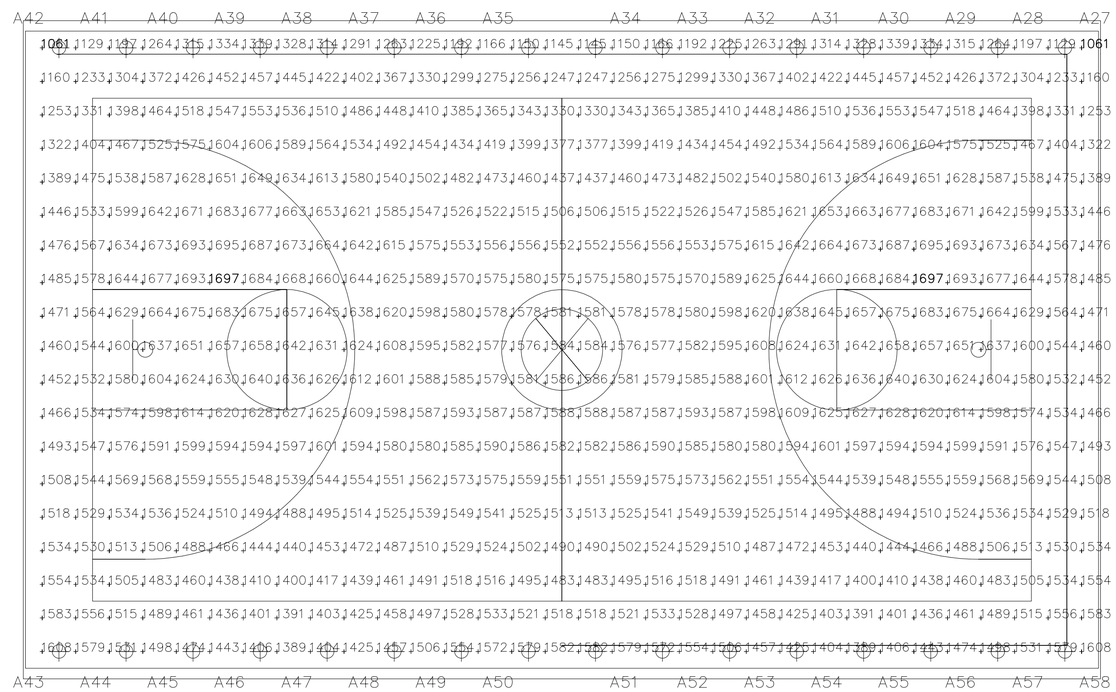

SCALE 1: 200

0 10m 20m

# ILLUMINATION SUMMARY

| OWNER : | PROJECT : | DESIGN BY: | SUBMITTED BY: | RECOMMENDING APPROVAL: | APPROVED BY : | SHEET CONTENT : | SHEET NO : |
|---|---|---|---|---|---|---|---|
| **PHILIPPINE SPORTS COMMISSION**<br>RMSC, PABLO OCAMPO SR. ST, MALATE, MANILA | **NINOY AQUINO STADIUM REHABILITATION PROJECT**<br>RMSC, PABLO OCAMPO SR. ST, MALATE, MANILA | DRAWN BY:<br>CHECK BY:<br>DATE: | ENGR. PEDRO I. PINEDA JR.<br>HEAD - ENGINEERING UNIT | DIR. MERLITA R. IBAY<br>DEPUTY EXECUTIVE DIRECTOR | HON. WILLIAM I. RAMIREZ<br>CHAIRMAN | AS SHOWN | E<br>21 22 |

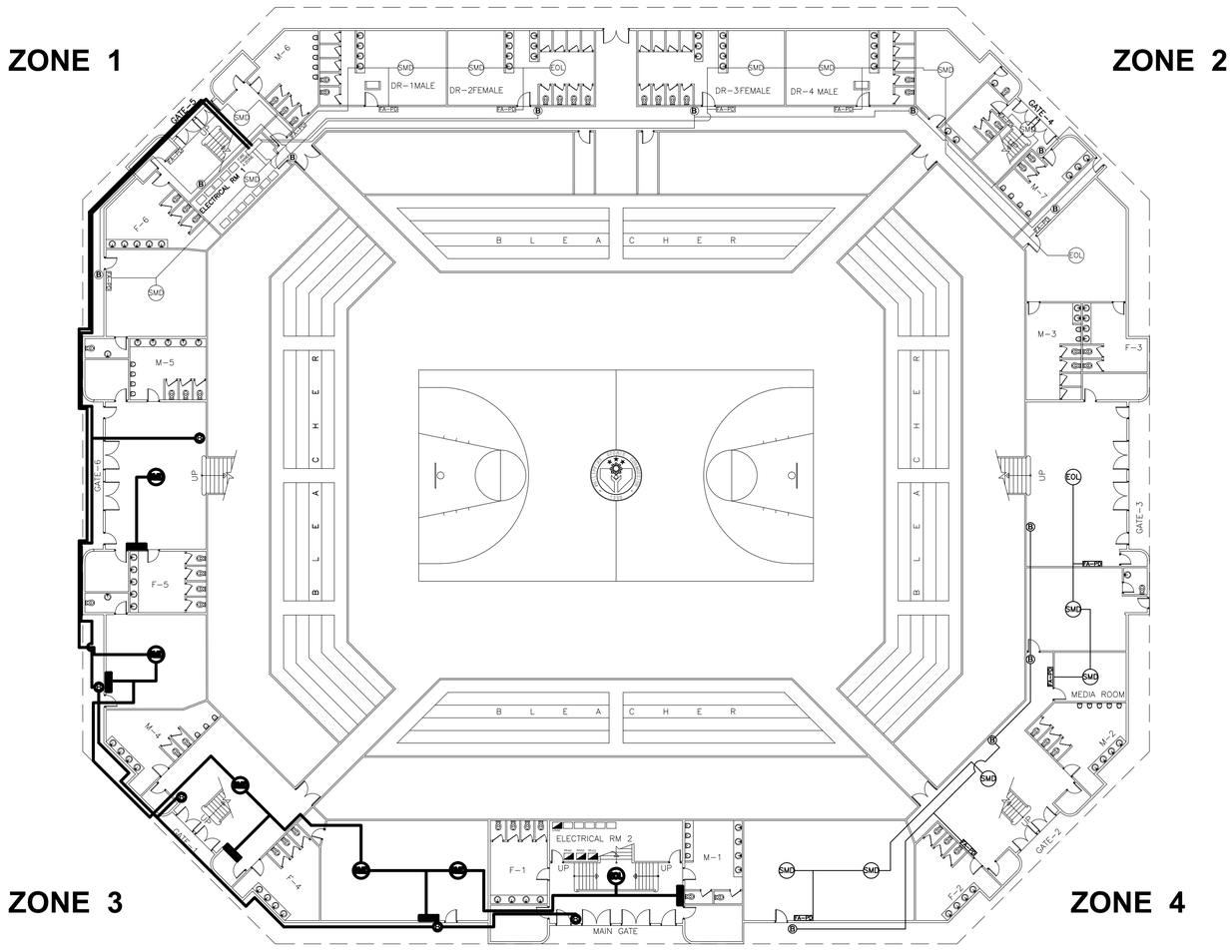


# GROUND FLOOR PLAN - FIRE ALARM SYSTEM LAYOUT

SCALE 1:200

0 1 2 3 4 5 10 20 30

## LEGEND :

| | | |
|---|---|---|
| 6 | SMD | SMOKE DETECTOR ZONE 1 |
| 5 | FA-PD | FIRE ALARM PULL DOWN ZONE 1 |
| 4 | B | BELL ZONE 1 |
| 5 | SMD | SMOKE DETECTOR ZONE 2 |
| 4 | FA-PD | FIRE ALARM PULL DOWN ZONE 2 |
| 4 | B | BELL ZONE 2 |
| 6 | SMD | SMOKE DETECTOR ZONE 1 |
| 5 | FA-PD | FIRE ALARM PULL DOWN ZONE 1 |
| 5 | B | BELL ZONE 1 |
| 6 | SMD | SMOKE DETECTOR ZONE 2 |
| 4 | FA-PD | FIRE ALARM PULL DOWN ZONE 2 |
| 4 | B | BELL ZONE 2 |

| OWNER : | PROJECT : | DESIGN BY: | SUBMITTED BY: | RECOMMENDING APPROVAL: | APPROVED BY : | SHEET CONTENT : | SHEET NO : |
|---|---|---|---|---|---|---|---|
| **PHILIPPINE SPORTS COMMISSION**<br>RMSC, PABLO OCAMPO SR. ST, MALATE, MANILA | **NINOY AQUINO STADIUM REHABILITATION PROJECT** | DRAWN BY:<br>CHECK BY: | ENGR. PEDRO I. PINEDA JR.<br>HEAD - ENGINEERING UNIT | DIR. MERLITA R. IBAY<br>DEPUTY EXECUTIVE DIRECTOR | HON. WILLIAM I. RAMIREZ<br>CHAIRMAN | AS SHOWN | FA<br>22 22 |
| | RMSC, PABLO OCAMPO SR. ST, MALATE, MANILA | DATE: | | | | | |

# GENERAL NOTES

1. ALL WORKS HEREIN INCLUDED SHALL BE EXECUTED ACCORDING TO THE PROVISION OF THE NATIONAL FIRE PROTECTION ASSOCIATION (USA) AND LOSS PREVENTION COUNCIL (UK).
2. THE WORKS SHALL BE EXECUTED IN CLOSE COORDINATION WITH ALL TRADE.
3. THE CONTRACTOR SHALL BE FULLY RESPONSIBLE FOR THE EXACT LOCATION AND DIMENSIONS OF ALL REQUIRED FLOOR AND WALL OPENINGS.
4. THE EXACT LOCATION OF ALL SPRINKLER HEADS SHALL BE COORDINATED WITH THE ARCHITECTURAL CEILING LAYOUTS AND SHALL BE SUBJECTED TO BOTH THE ARCHITECTS AND FIRE PROTECTION ENGINEERS APPROVAL.
5. LOCATION AND MOUNTING OF FIRE HOSE CABINETS SHALL BE COORDINATED WITH ARCHITECTURAL FINISHES AND BE SUBJECTED TO BOTH THE ARCHITECTS AND FIRE PROTECTION ENGINEERS APPROVAL.
6. SIZE OF RISER NIPPLE SHALL CONFORM TO PIPE SCHEDULE AS DELINEATED IN NFPA 13.
7. PIPE SUPPORTS, HANGERS AND BRACING SHALL BE OF THE APPROVED TYPE AND SHALL BE INDEPENDENT FROM CEILING AND DUCT SUPPORT.
8. ACCESS FOR CONTROL VALVES SHALL BE LOCATED AT COMMON AREAS.
9. ALL PIPES PASSING THRU WALLS AND FLOORS, PROVIDE PIPE SLEEVES. PIPE SLEEVE SHOULD BE PLASTIC, WATERPROOF HEAT RESISTANT CAULKING COMPOUND WITH OAKUM MASTIC PACKING.
10. PROVIDE PIPE HANGER @ EVERY 2 METERS , SWAY BRACE AND CLEVIS SUPPORT @ EVERY 12 METERS.
11. PROVIDE FLANGE CONNECTION EVERY 12 METERS AND ONE SIDE AT EVERY FITTING CONNECTION.

## SCHEDULE OF EQUIPMENT

| DESIGNATION | QUANTITY | TYPE | DRIVE | PUMP CHARACTERISTICS | | | MOTOR DATA | | | |
|---|---|---|---|---|---|---|---|---|---|---|
| | | | | CAPACITY (GPM) | HEAD (PSI) | SPEED (RPM) | RATING (HP) | VOLTAGE | PHASE | CYCLE |
| FP | 1 | HORIZONTAL SPLIT CASE | MOTOR | 400 | 100 | SEE CURVE | 36 | 440 | 3Ø | 60HZ |
| JP | 1 | VERTICAL IN-LINE | MOTOR | 50 | 90 | SEE CURVE | 5.5 | 440 | 3Ø | 60HZ |

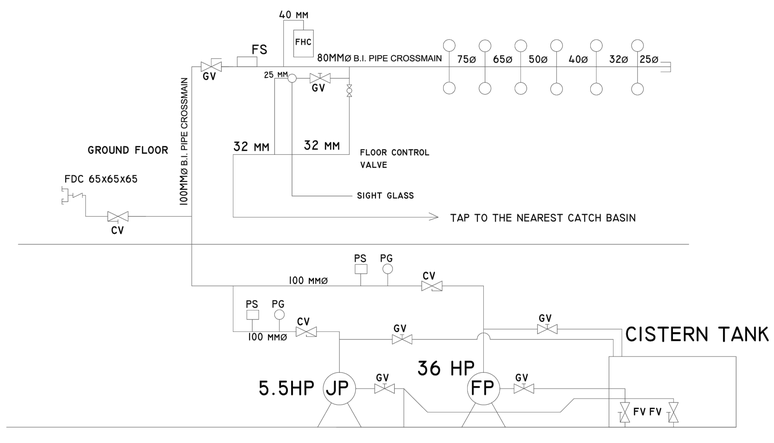


SCHEMATIC DIAGRAM

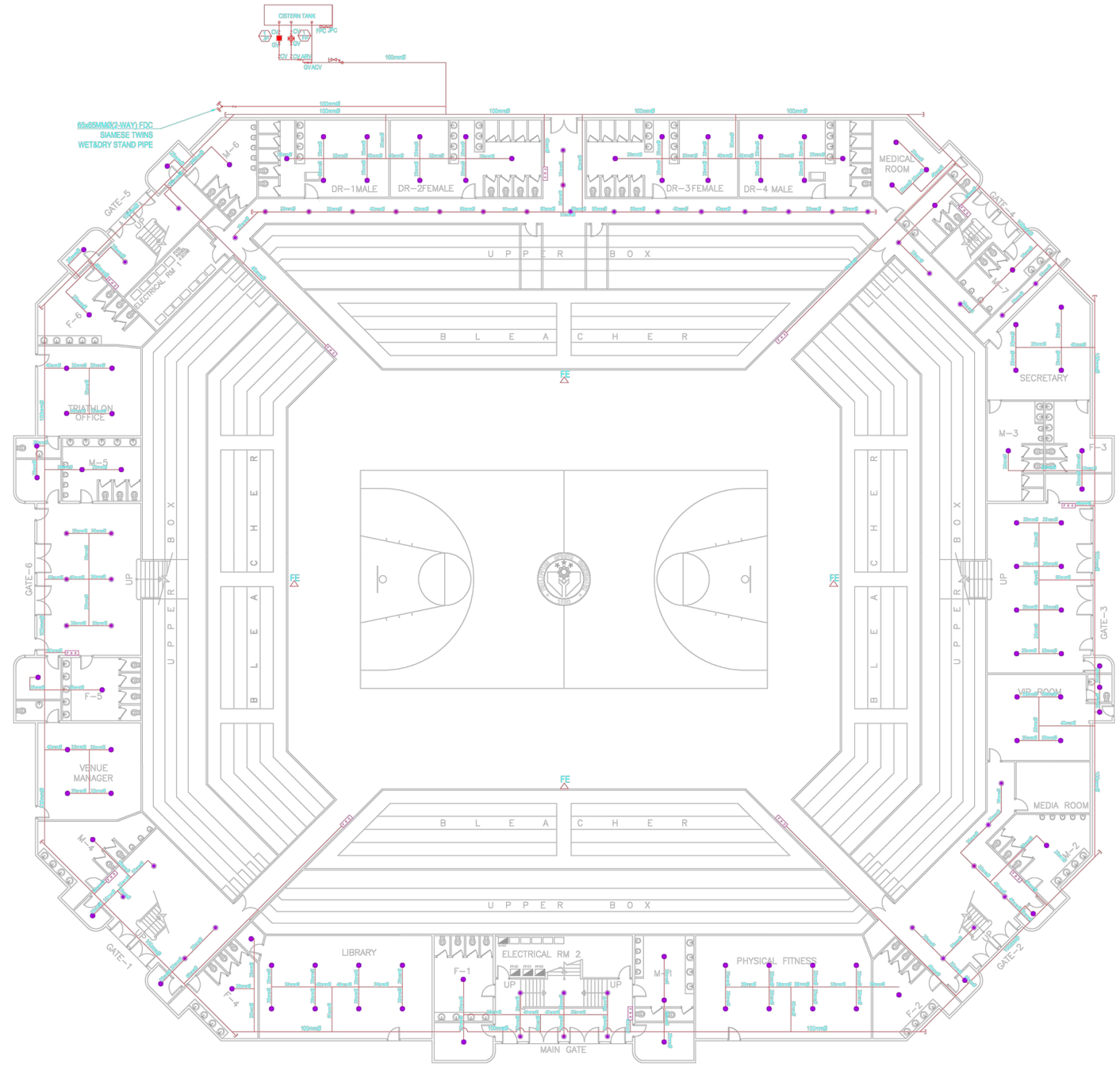


| OWNER : | PROJECT : | DESIGN BY: | SUBMITTED BY: | RECOMMENDING APPROVAL: | APPROVED BY : | SHEET CONTENT : | SHEET NO : |
|---|---|---|---|---|---|---|---|
| **PHILIPPINE SPORTS COMMISSION**<br>RMSC, PABLO OCAMPO SR. ST, MALATE, MANILA | **NINOY AQUINO STADIUM REHABILITATION PROJECT**<br>RMSC, PABLO OCAMPO SR. ST, MALATE, MANILA | DRAWN BY:<br>CHECK BY:<br>DATE: | ENGR. PEDRO I. PINEDA JR.<br>HEAD - ENGINEERING UNIT | DIR. MERLITA R. IBAY<br>DEPUTY EXECUTIVE DIRECTOR | HON. WILLIAM I. RAMIREZ<br>CHAIRMAN | AS SHOWN | FP 1 1 |

# EQUIPMENT SCHEDULE

## PACKAGED WATER COOLED CHILLERS:

| UNIT DESTINATION | QTY. | MODEL | TYPE | COOLING CAPACITY (TR) | EVAPORATOR PERFORMANCE DATA | | | | | CONDENSER PERFORMANCE DATA | | | | | MAXIMUM POWER INPUT (kW) | kW / TR | ELETRICAL CHARACTERISTICS | | | CONTROLER TYPE | REFRIGERANT TYPE | REMARKS |
|---|---|---|---|---|---|---|---|---|---|---|---|---|---|---|---|---|---|---|---|---|---|---|
| | | | | | WATER FLOW (LPM) | ENTERING WATER TEMP. (°C) | LEAVING WATER TEMP. (°C) | MAX PD. (kPa) | PIPE CONN. INLET/OUTLET | WATER FLOW (LPM) | ENTERING WATER TEMP. (°C) | LEAVING WATER TEMP. (°C) | MAX PD. (kPa) | PIPE CONN. INLET/OUTLET | | | VOLTS | PHASE | HERTZ | | | |
| CH 1-2 | 2 | KOPPEL KWS-300T3C | SEMI-HERMETIC SCREW COMPRESSOR | 250 | 2520 | 12 | 7 | 71 | 168 mm | 3150 | 30 | 35 | 61 | 168 mm | 171 | 0.69 | 220 | 3 | 60 | TOUCH SCREEN CONTROL PANEL | R134A | |

## AIR HANDLING UNITS:

| UNIT DESTINATION | QTY | MODEL | LOCATION | TYPE / ARRANGEMENT | MOUNTING | SUPPLY AIR FLOW RATE ($m^3/h$) | COOLING COIL DATA | | | | | | | | | FAN BLOWER DATA | | MOTOR DATA RATING (kW) | ELETRICAL CHARACTERISTICS | | | AIR FILTER TYPE | REMARKS |
|---|---|---|---|---|---|---|---|---|---|---|---|---|---|---|---|---|---|---|---|---|---|---|---|
| | | | | | | | TOTAL COOLING CAP. (TR) | ENT. AIR DB/WB TEMP. (°C/°C) | LVG. AIR DB/WB TEMP. (°C/°C) | CHILLED WATER FLOW (LPM) | MAX. FACE VELOCITY (m/s) | ENTERING CHILLED WATER TEMP. (°C) | LEAVING CHILLED WATER TEMP. (°C) | MAX. WATER PRESSURE DROP (kPa) | CHILLED WATER PIPE CONN. INLET/OUTLET | TYPE | ESP. (Pa) | | VOLTS | PHASE | HERTZ | PRE-FILTER | |
| AHU 1-8 | 8 | KOPPEL KSDV-720T1C | | VERTICAL, CABINET, DRAW THRU | FLOOR MOUNTED | 45900 | 60 | 27/19 | 15.6/13.86 | 660 | 2.58 | 7 | 12 | 59.18 | 65 | FORWARD CURVE | 500 | 18.5 | 220 | 3 | 60 | G3 | |

## COOLING TOWERS:

| UNIT DESTINATION | QTY. | MODEL | TYPE | COOLING TOWER DATA | | | | NO. OF FANS | TOTAL POWER (kW) | ELETRICAL CHARACTERISTICS | | | CASING MATERIAL | FAN IMPELLER | REMARKS |
|---|---|---|---|---|---|---|---|---|---|---|---|---|---|---|---|
| | | | | WATER FLOW RATES (LPM) | ENTERING WATER TEMP. (°C) | LEAVING WATER TEMP. (°C) | AMBIENT WB TEMP (°C ) | | | VOLTS | PHASE | HERTZ | | | |
| CT 1-2 | 2 | ROSEMEX ROD-842D | OPEN TYPE, CROSS FLOW INDUCED DRAFT | 3150 | 35.0 | 30.4 | 27.0 | 1 | 11 | 220 | 3 | 60 | 2700 HOT DIP GALVANIZED STEEL | ALUMINUM ALLOY HOLLOW AIRFOIL BLADES | |

## CHILLED WATER PUMPS:

| UNIT DESTINATION | QTY | SERVICE | TYPE | WATER FLOW RATES (LPM) | TOTAL DYNAMIC HEAD (m.) | MAX. MOTOR SIZE (kW) | RPM | CONTROLER TYPE | ELETRICAL CHARACTERISTICS | | | REMARKS |
|---|---|---|---|---|---|---|---|---|---|---|---|---|
| | | | | | | | | | VOLTS | PHASE | HERTZ | |
| CHWP 1-3 | 3 | CHILLED WATER | END SUCTION CENTRIFUGAL PUMP | 2520 | 17.2 | 11 | 1800 | STANDARD CONTROL PANEL | 220 | 3 | 60 | EBARA BRAND |

## CONDENSER WATER PUMPS:

| UNIT DESTINATION | QTY | SERVICE | TYPE | WATER FLOW RATES (LPM) | TOTAL DYNAMIC HEAD (m.) | MAX. MOTOR SIZE (kW) | RPM | CONTROLER TYPE | ELETRICAL CHARACTERISTICS | | | REMARKS |
|---|---|---|---|---|---|---|---|---|---|---|---|---|
| | | | | | | | | | VOLTS | PHASE | HERTZ | |
| COWP 1-3 | 3 | CONDENSER WATER | END SUCTION CENTRIFUGAL PUMP | 3150 | 10 | 11 | 1800 | STANDARD CONTROL PANEL | 220 | 3 | 60 | EBARA BRAND |

| OWNER : | PROJECT : | DESIGN BY: | SUBMITTED BY: | RECOMMENDING APPROVAL: | APPROVED BY : | SHEET CONTENT : | SHEET NO : |
|---|---|---|---|---|---|---|---|
| **PHILIPPINE SPORTS COMMISSION**<br>RMSC, PABLO OCAMPO SR. ST, MALATE, MANILA | **NINOY AQUINO STADIUM REHABILITATION PROJECT**<br>RMSC, PABLO OCAMPO SR. ST, MALATE, MANILA | DRAWN BY:<br>CHECK BY:<br>DATE: | ENGR. PEDRO I. PINEDA JR.<br>HEAD - ENGINEERING UNIT | DIR. MERLITA R. IBAY<br>DEPUTY EXECUTIVE DIRECTOR | HON. WILLIAM I. RAMIREZ<br>CHAIRMAN | AS SHOWN | M 1 5 |

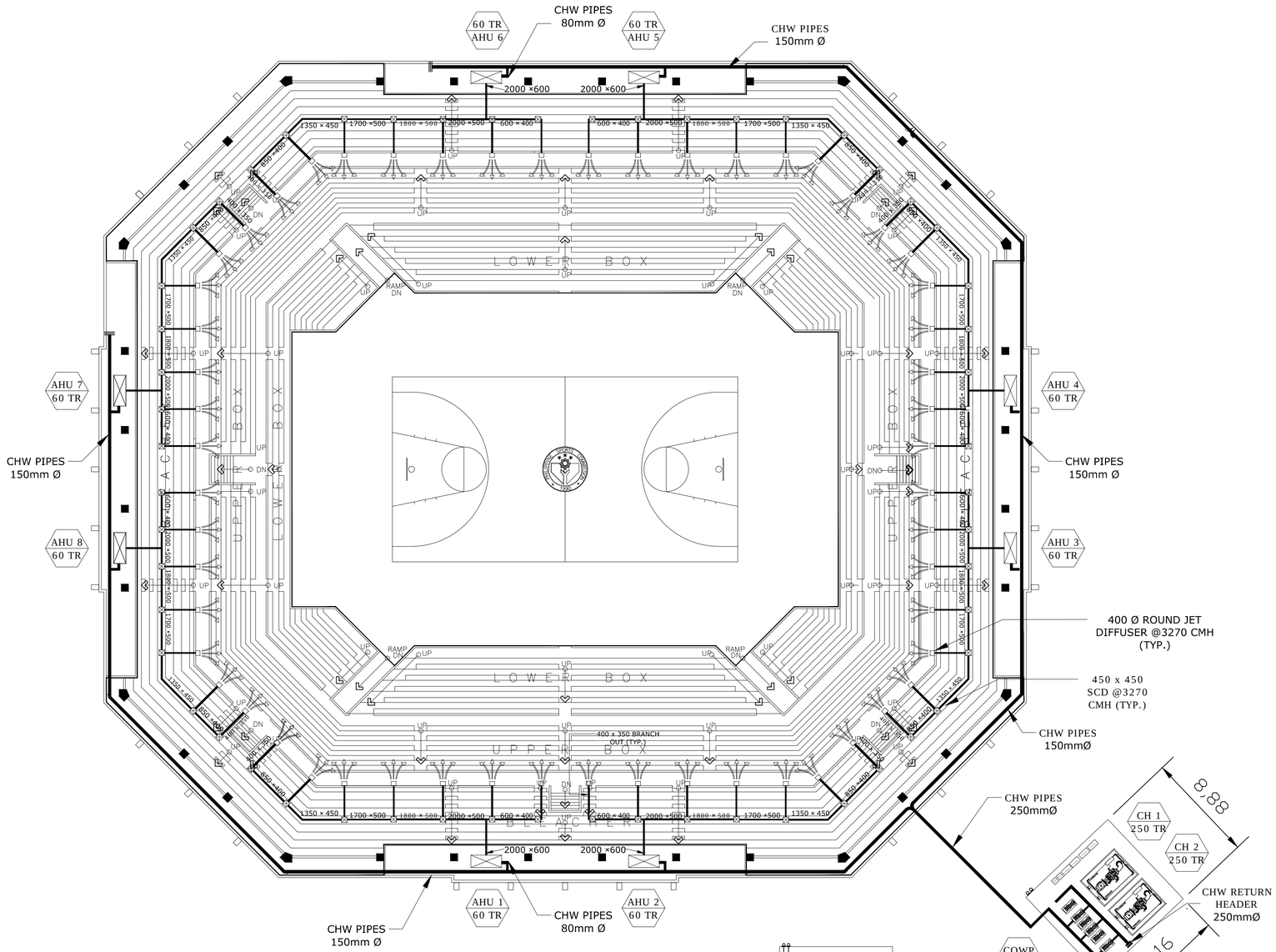


A
M-2

# AIRCONDITIONING LAYOUT

SCALE: NTS

| OWNER : | PROJECT : | DESIGN BY: | SUBMITTED BY: | RECOMMENDING APPROVAL: | APPROVED BY : | SHEET CONTENT : | SHEET NO : |
|---|---|---|---|---|---|---|---|
| **PHILIPPINE SPORTS COMMISSION**<br>RMSC, PABLO OCAMPO SR. ST, MALATE, MANILA | **NINOY AQUINO STADIUM REHABILITATION PROJECT** | DRAWN BY: | ENGR. PEDRO I. PINEDA JR.<br>HEAD - ENGINEERING UNIT | DIR. MERLITA R. IBAY<br>DEPUTY EXECUTIVE DIRECTOR | HON. WILLIAM I. RAMIREZ<br>CHAIRMAN | AS SHOWN | M<br>2 5 |
| | RMSC, PABLO OCAMPO SR. ST, MALATE, MANILA | CHECK BY:<br>DATE: | | | | | |

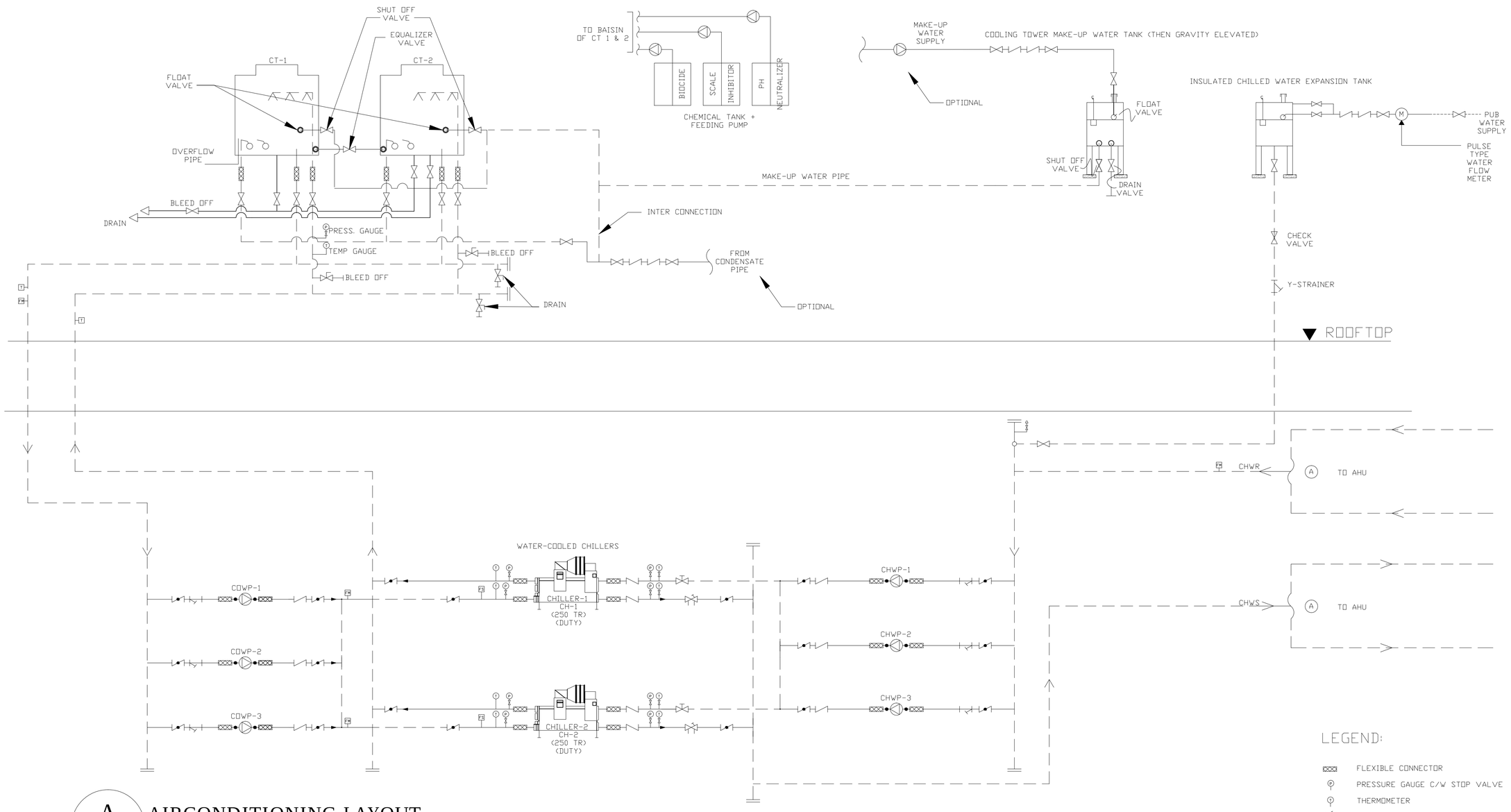


A
M-2
AIRCONDITIONING LAYOUT
SCALE: NTS

A
M-3
CHILLED WATER SYSTEM PIPING SCHEMATIC DIAGRAM
SCALE: NTS

LEGEND:

- FLEXIBLE CONNECTOR
- PRESSURE GAUGE C/W STOP VALVE
- THERMOMETER
- MANUAL BALANCING VALVE
- GATE VALVE
- CHECK VALVE
- FLOW SWITCH
- MANUAL BUTTERFLY VALVE
- WYE STRAINER

| OWNER : | PROJECT : | DESIGN BY: | SUBMITTED BY: | RECOMMENDING APPROVAL: | APPROVED BY : | SHEET CONTENT : | SHEET NO : |
|---|---|---|---|---|---|---|---|
| **PHILIPPINE SPORTS COMMISSION**<br>RMSC, PABLO OCAMPO SR. ST, MALATE, MANILA | **NINOY AQUINO STADIUM REHABILITATION PROJECT**<br>RMSC, PABLO OCAMPO SR. ST, MALATE, MANILA | DRAWN BY:<br>CHECK BY:<br>DATE: | ENGR. PEDRO I. PINEDA JR.<br>HEAD - ENGINEERING UNIT | DIR. MERLITA R. IBAY<br>DEPUTY EXECUTIVE DIRECTOR | HON. WILLIAM I. RAMIREZ<br>CHAIRMAN | AS SHOWN | M 3 5 |

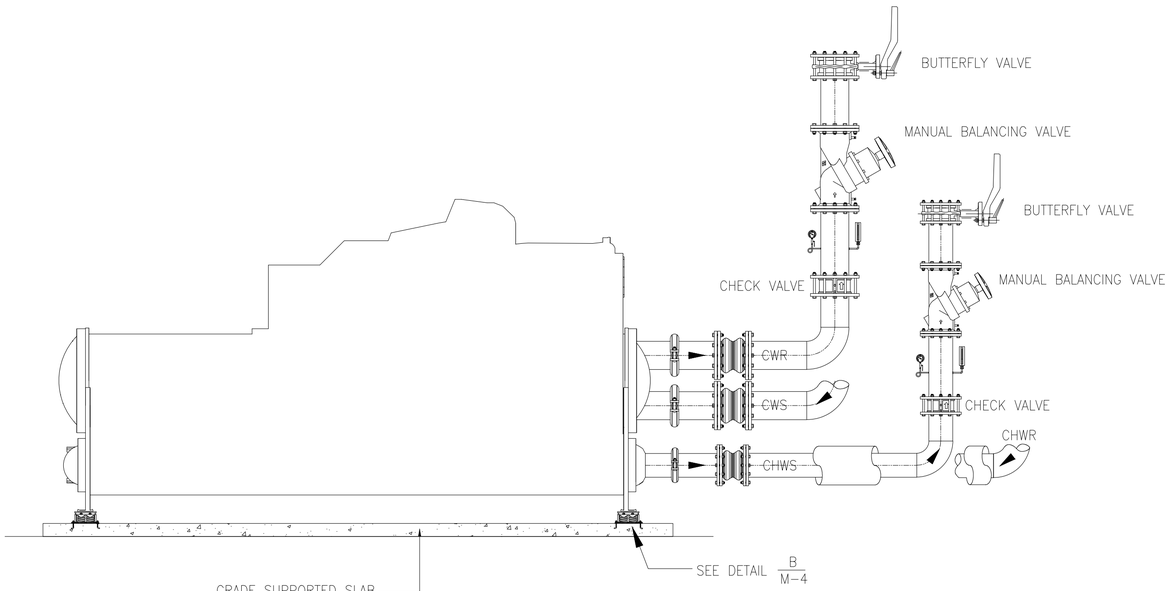


A/M-4 PACKAGED WATER CHILLER CONN. DET.
SCALE: NTS

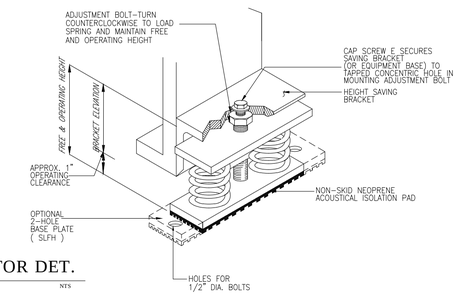


B/M-4 SPRING VIBRATION ISOLATOR DET.
SCALE: NTS

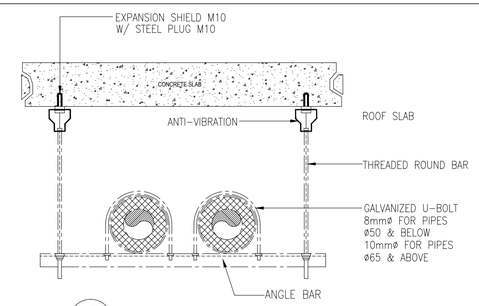


C/M-4 CHILLED WATER PIPE HANGER DET.
SCALE: NTS

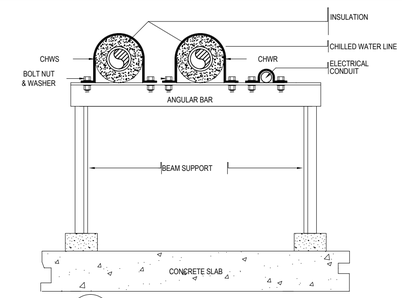


D/M-4 PIPE SUPPORT DET.
SCALE: NTS

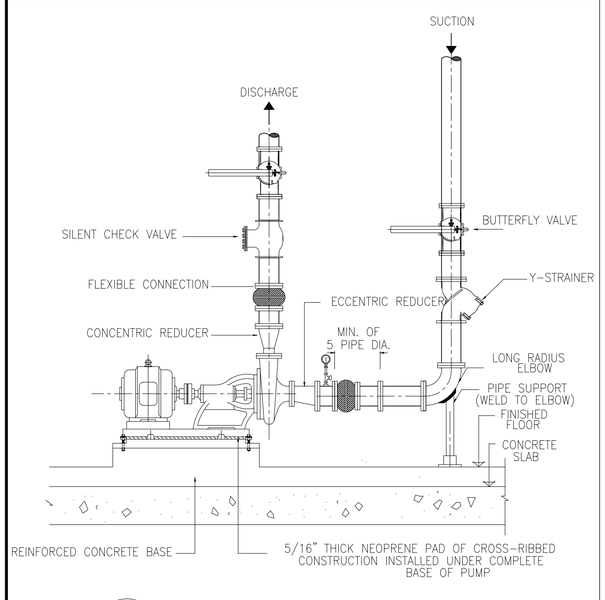


E/M-4 CHILLED WATER PUMP CONN. DET.
SCALE: NTS

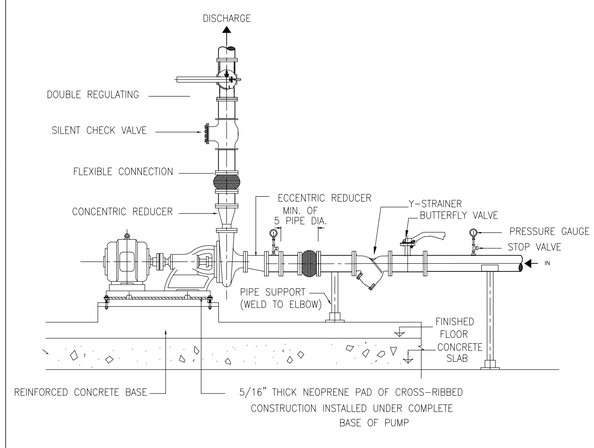


F/M-4 CONDENSER WATER PUMP CONN. DET.
SCALE: NTS

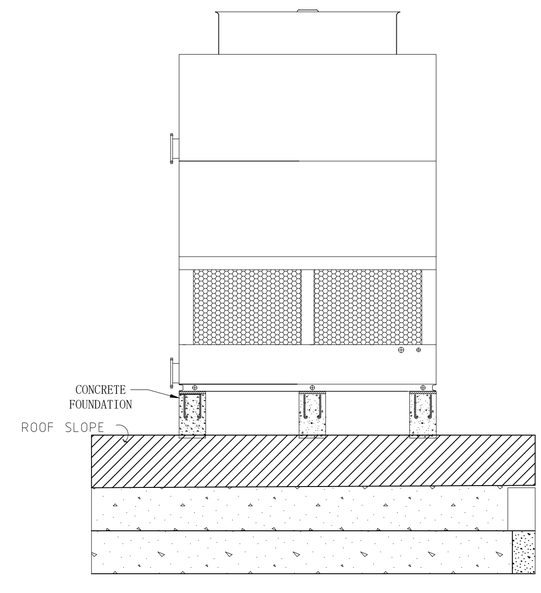


G/M-4 COOLING TOWER BASE SUPPORT
SCALE: NTS

| OWNER : | PROJECT : | DESIGN BY: | SUBMITTED BY: | RECOMMENDING APPROVAL: | APPROVED BY : | SHEET CONTENT : | SHEET NO : |
|---|---|---|---|---|---|---|---|
| **PHILIPPINE SPORTS COMMISSION**<br>RMSC, PABLO OCAMPO SR. ST, MALATE, MANILA | **NINOY AQUINO STADIUM REHABILITATION PROJECT** | DRAWN BY:<br>CHECK BY: | ENGR. PEDRO I. PINEDA JR.<br>HEAD - ENGINEERING UNIT | DIR. MERLITA R. IBAY<br>DEPUTY EXECUTIVE DIRECTOR | HON. WILLIAM I. RAMIREZ<br>CHAIRMAN | AS SHOWN | M 4 5 |
| | RMSC, PABLO OCAMPO SR. ST, MALATE, MANILA | DATE: | | | | | |

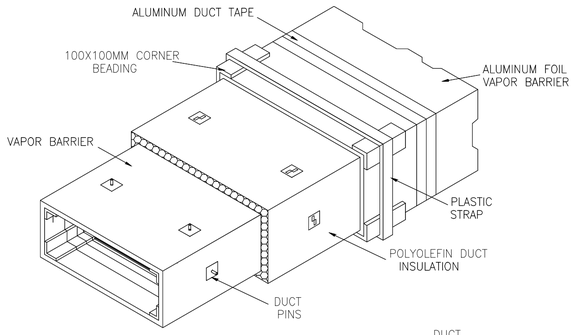


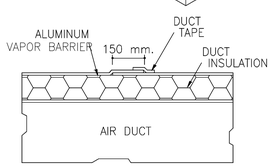


LAP CONNECTION

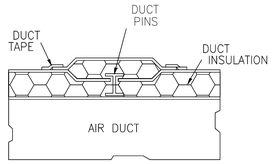


INSULATION FASTENING

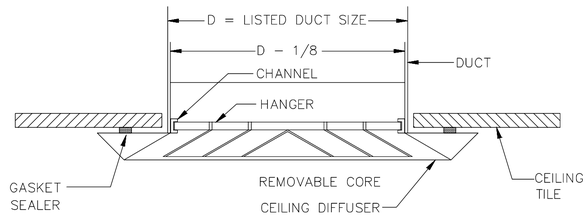


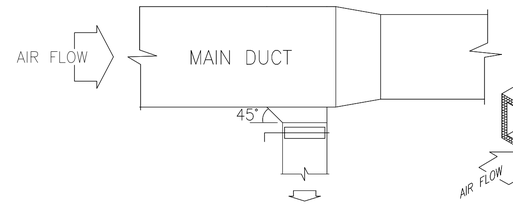


PLAN

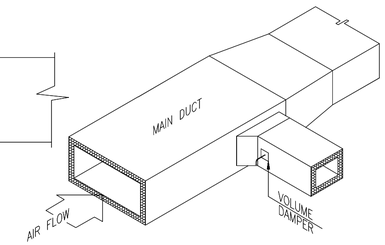


ISOMETRY

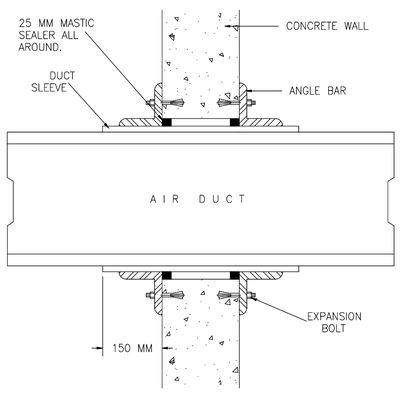


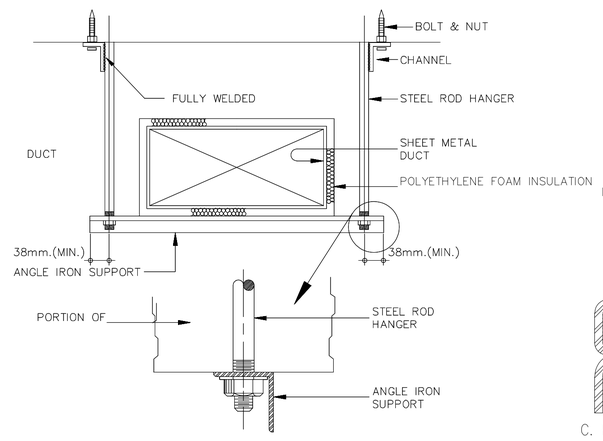


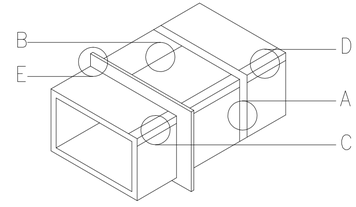

A. DRIVE SLIP

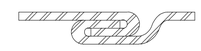

B. INSIDE GROOVE SEAM

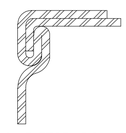

C. PITTSBURGH SEAM

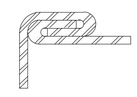

D. SLIDING SEAM

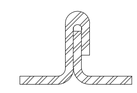

E. STANDING SEAM

| DIMENSION LONGEST SIDE MM | SHEET METAL GAGE (ALL 4 SIDES) |
|---|---|
| UP TO 450 | GAGE # 24 |
| 475 TO 750 | GAGE # 24 |
| 775 TO 1050 | GAGE # 22 |
| 1075 TO 1350 | GAGE # 22 |
| 1375 TO 1500 | GAGE # 20 |
| 1525 TO 2150 | GAGE # 20 |
| 2175 TO 2450 | GAGE # 18 |
| OVER 2450 | GAGE # 18 |

| OWNER : | PROJECT : | DESIGN BY: | SUBMITTED BY: | RECOMMENDING APPROVAL: | APPROVED BY : | SHEET CONTENT : | SHEET NO : |
|---|---|---|---|---|---|---|---|
| **PHILIPPINE SPORTS COMMISSION**<br>RMSC, PABLO OCAMPO SR. ST, MALATE, MANILA | **NINOY AQUINO STADIUM REHABILITATION PROJECT** | DRAWN BY:<br>CHECK BY: | ENGR. PEDRO I. PINEDA JR.<br>HEAD - ENGINEERING UNIT | DIR. MERLITA R. IBAY<br>DEPUTY EXECUTIVE DIRECTOR | HON. WILLIAM I. RAMIREZ<br>CHAIRMAN | AS SHOWN | M<br>5 5 |
| | RMSC, PABLO OCAMPO SR. ST, MALATE, MANILA | DATE: | | | | | |